Hybrid recorder

HR-700

(Dot printing type)

Instruction manual

Shinko
North America Ltd.

25 Whitefriars Drive
Toronto, Ontario, Canada M3A 2L2
TEL: 416 444-0817
FAX: 416 444-2361
TOLL FREE: 1 888-4SHINKO

Web Site: www.shinkona.com
Email: sales@shinkona.com

4. WIRING

4.1 Terminal arrangement and power wiring

4.1.1 Terminal arrangement

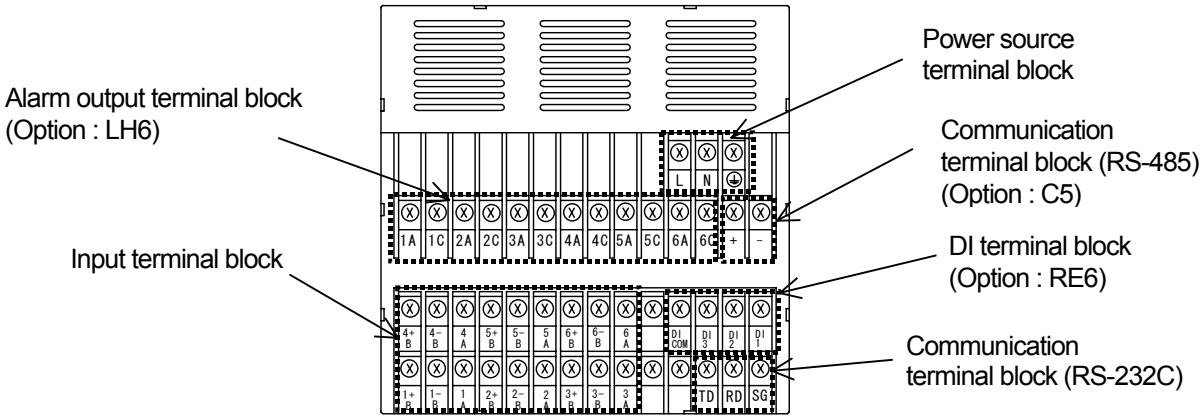

Fig. 4.1 Terminal Layout (Rear view)

4.1.2 Power Wiring

WARNING

① In order to prevent an electric shock, be sure to provide protective grounding prior to the power supply to the instrument.

② Do not cut a protective grounding conductor or disconnect protective grounding.

③ Make sure that the supply voltage for the instrument conforms to the voltage of the supply source.

④ Attach a transparent protective cover prior to turning on the POWER of the instrument.

⑤ Any interruption of the protective conductor inside or outside the instrument or disconnection of the protective grounding terminal is likely to make the instrument dangerous under some fault conditions. Intentional interruption is prohibited.

⚠ CAUTION

① As an electric wire for the power source, use a 600 V vinyl insulated wire (IEC 227-3) or its equivalent or above.

② Attach a round press-fitting terminal with insulated sleeve (for M3.5) to the end of the electric wire.

③ Connect a protective grounding (resistance:100 Ωor lower, a minimum diameter of a grounding conductor:1.6mm) to the protective grounding terminal.

④ If other instrument shares the protective grounding conductor, there may be an effect caused by noise coming from the grounding conductor. It is recommended not to share it with other instrument.

⑤ In order to comply with the requirements of safety standard EN61010, the recorder shall have one of the following as a disconnecting device, fitted within easy reach of the operator, and labeled as the disconnecting device.

a. A switch or circuit breaker which complies with the requirements of IEC60947-1, IEC60947-2 and IEC60947-3.

b. A separable coupler which can be disconnected without the use of a tool.

c. A separable plug, without a locking device, to mate with a socket outlet in the building.

⑥ This product has designed to conform to IEC1010-1 installation CategoryⅡ and pollution degree 2.

4.1.3 Wiring Procedure

⚠ CAUTION

The transparent protective cover should surely remove the left and right (both sides) hooks simultaneously. If it removes by turns, there is a possibility that it may be damaged.

1) Put your fingers on the left and right (both sides) hooks of the transparent protective cover on the power source terminal block. Pushing them inside, pull out the cover.
2) Connect the power source electric wire referring to Fig. 4.2. Connect the protective grounding to the ⏚ terminal. Connect the non-grounding side of the power source to "L" terminal. Connect the grounding side to the "N" terminal.
3) Put on the transparent protective cover.
4) Make sure that protective grounding is properly done.

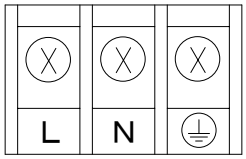

Fig. 4.2 Power source Terminal block

4.2 Input Wiring

⚠ CAUTION

①Precautions for the input electric wire

- See to it that no noise is mixed in input wiring. For input wiring, it is recommended a shielding wire or twisted wire effective for noise be used.
- In the case of thermocouple input, connect a thermocouple wire directly or use a compensating lead wire. It is recommended a shielded input line be used.
- In the case of resistance temperature detector input, dispersion of 3-wire line resistance should be less than the below mentioned values. It is recommended a shielded input line be used.
  For Pt 100, JPt 100 ; 50m Ω max.
- When it is likely to be affected by induction noise, particularly when wiring near the high-frequency power source, it is recommended a shielded twisted wire be used.
- Attach a round press-fitting terminal with insulated sleeve (for M3.5) to the end of the electric wire.

② Precautions for wiring

- The wiring between the instrument and measurement point should be kept away from the power circuit (25V or higher circuit or DO circuit).
- Short-circuit unused input terminals. (Short-circuit between "＋" and "－" in the case of mV, V, or thermocouple input, and short-circuit among A, B, and B in the case of resistance temperature detector input.)
- Be sure to ground the shield of connecting wire.

4.2.1 Wiring Procedure

⚠ CAUTION

The transparent protective cover should surely remove the left and right (both sides) hooks simultaneously. If it removes by turns, there is a possibility that it may be damaged.

1) Put your fingers on the left and right (both sides) hooks of the transparent protective cover on the input terminal block. Pushing them inside, put out the cover.
2) Wire the input lines referring to Fig. 4.3(Page 18), Fig. 4.4 and Fig. 4.5.(Page 19)
3) Put on the transparent protective cover.

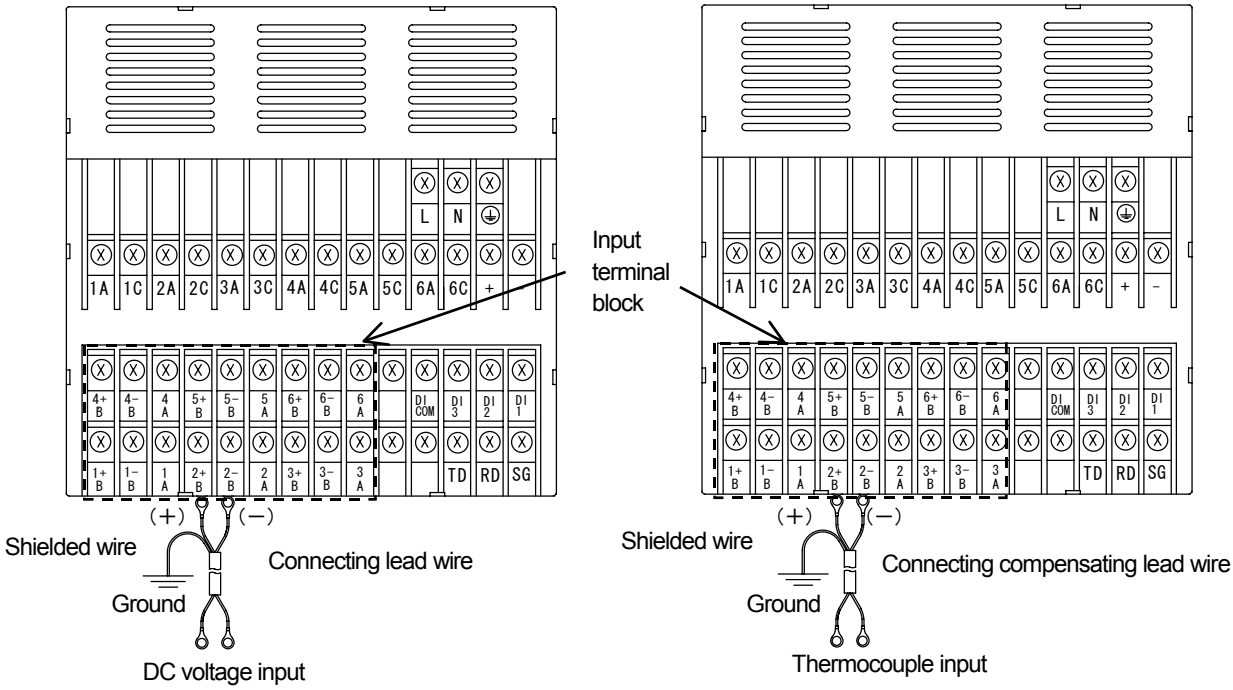

Fig. 4.3 Input Wiring (For mV, V and Thermocouple inputs)

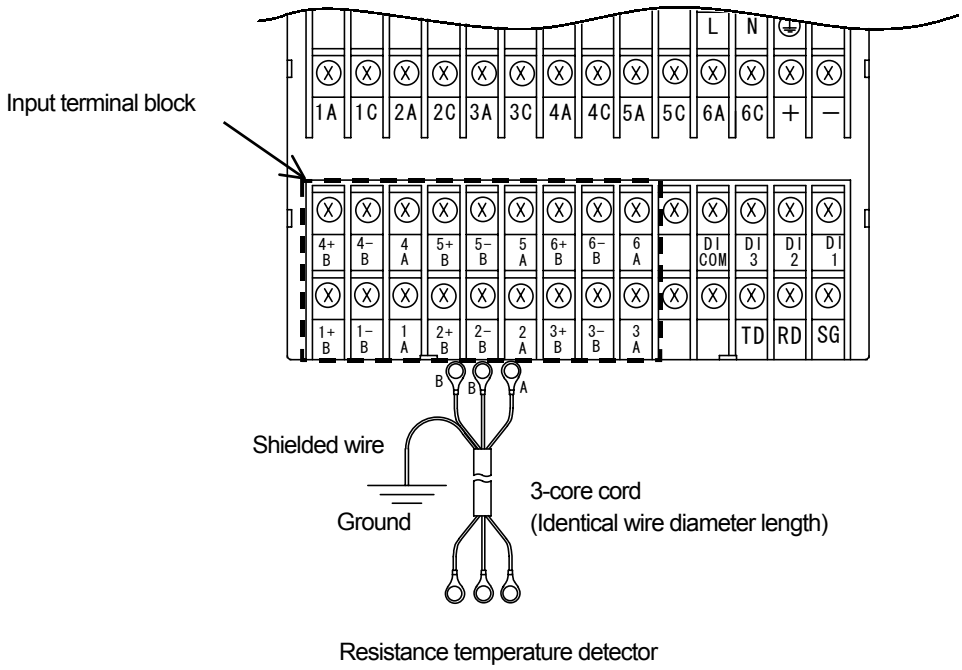

Fig. 4.4 Input Wiring (For Resistance temperature detector)

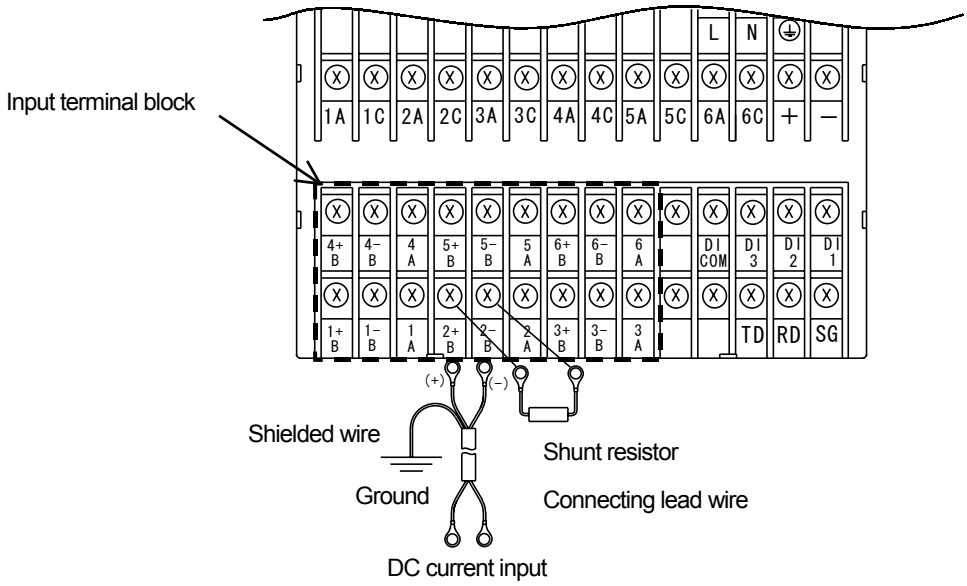

Fig. 4.5 Input Wiring (For mA input)

⚠ CAUTION

① Attach the shunt resistor to the input terminal block of the instrument.

② A shunt resistor influences input accuracy. Use the following recommended resistor.

Resistance : 250 Ω, Rated power : 1/4W, Tolerance : ±0.1% max.

Temperature coefficient : ±50ppm max.

4.3 DI function/Alarm Output Wiring (Option)

⚠ WARNING

① Be sure to wire after turning off the POWER.

② When the power source has been connected to the Alarm output, turn off that power source.

③ When a hazardous voltage is supplied to alarm terminal:

a) Never touch terminals preventing from electric shock.

b) Attach covers to terminals.

c) Wires should be double shielded.

d) Adopts round pressure terminal connectors with insulation cover for wire, preventing from lose connection.

⚠ CAUTION

Precautions for Wiring the DI function

① DI function input has the built-in drive power source. Do not apply a voltage to a DI function input terminal from the outside.

② A DI function input contact capacity should be a withstanding voltage of 50Vdc, 16mA or more, ON resistance of 20 Ωmax.(Wiring resistance included).

③ Do not use unused terminals as relay terminals.

Precautions for Wiring the Alarm Output

① An alarm output contact capacity is as follows:

250Vac	:	3A at maximum (Resistive load)
30Vdc	:	3A at maximum (Resistive load)
125Vdc	:	0.5A at maximum (Resistive load)
		0.1A at maximum L/R= 7ms at maximum (Inductive load)

② Attach an anti-surge protective circuit (surge absorbers, etc.) to an output terminal, when required.

③ Attach a round press-fitting terminal with insulated sleeve (for M3.5) to the end of an electric wire.

④ Keep alarm output wiring away from input wiring.

⑤ Do not use unused terminals as relay terminals.

4.3.1 DI function/Alarm Output Wiring Example

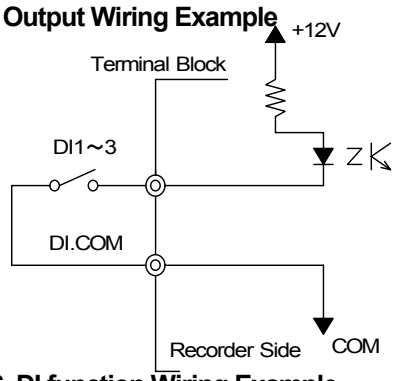

Fig. 4.6 DI function Wiring Example

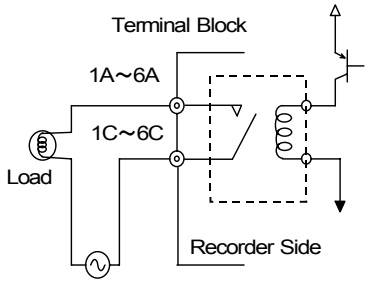

Fig. 4.7 Alarm Output Wiring Example

CAUTION

The DI function (Option) consists of a combination of 3 Digital inputs. The alarm output consists of 6-Relay output (Normally open).

4.3.2 Alarm Output Wiring Procedure

Wire the Alarm output (option : LH6) referring to Fig.4.8.

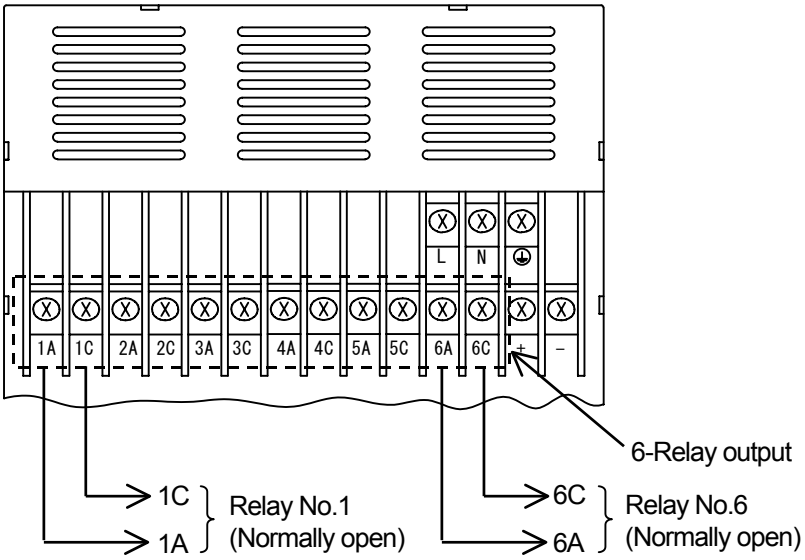

Fig. 4.8 Alarm Output Wiring

4.3.3 DI function Wiring Procedure

Wire the DI function (option : RE6) referring to Fig.4.9.

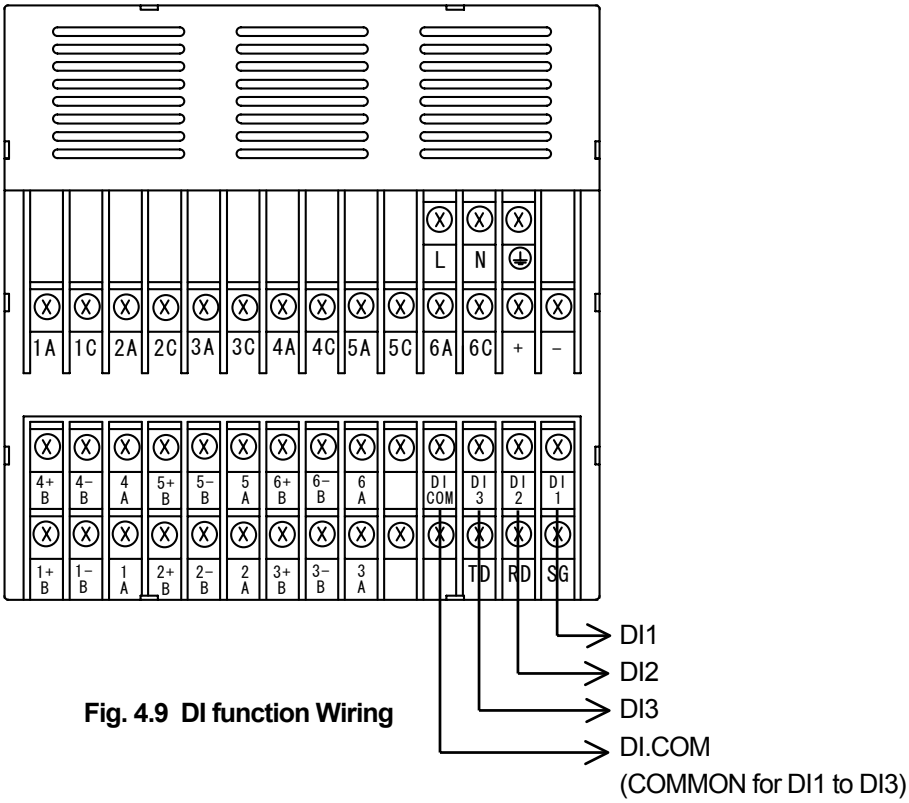

Fig. 4.9 DI function Wiring

4.4 Communication Wiring

CAUTION

Precautions for the communication wiring

① See to it that no noise is mixed in communication wiring. For communication wiring, it is recommended a shielding wire effective for noise be used.

② When it is likely to be affected by induction noise, particularly when wiring near the high-frequency power source, it is recommended a shielded twisted wire be used.

③ Attach a round press-fitting terminal with insulated sleeve (for M3.5) to the end of the electric wire.

④ Be sure to ground the shield of a connecting wire.

4.4.1 RS-232C Wiring

Wire RS-232C referring to Fig.4.10.

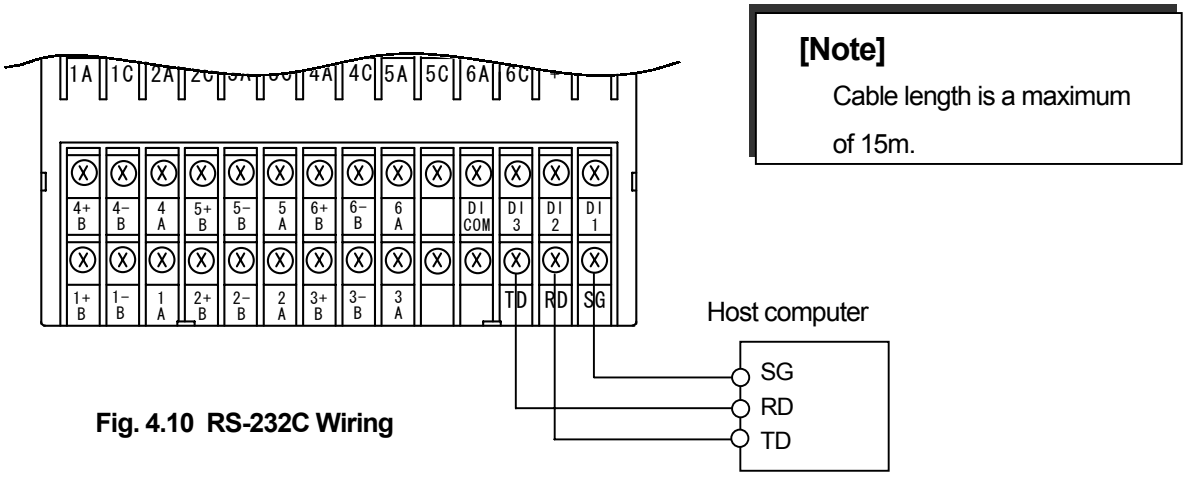

[Note]
Cable length is a maximum of 15m.

Fig. 4.10 RS-232C Wiring

4.4.2 RS-485 Wiring

Wire RS-485 referring to Fig.4.11.

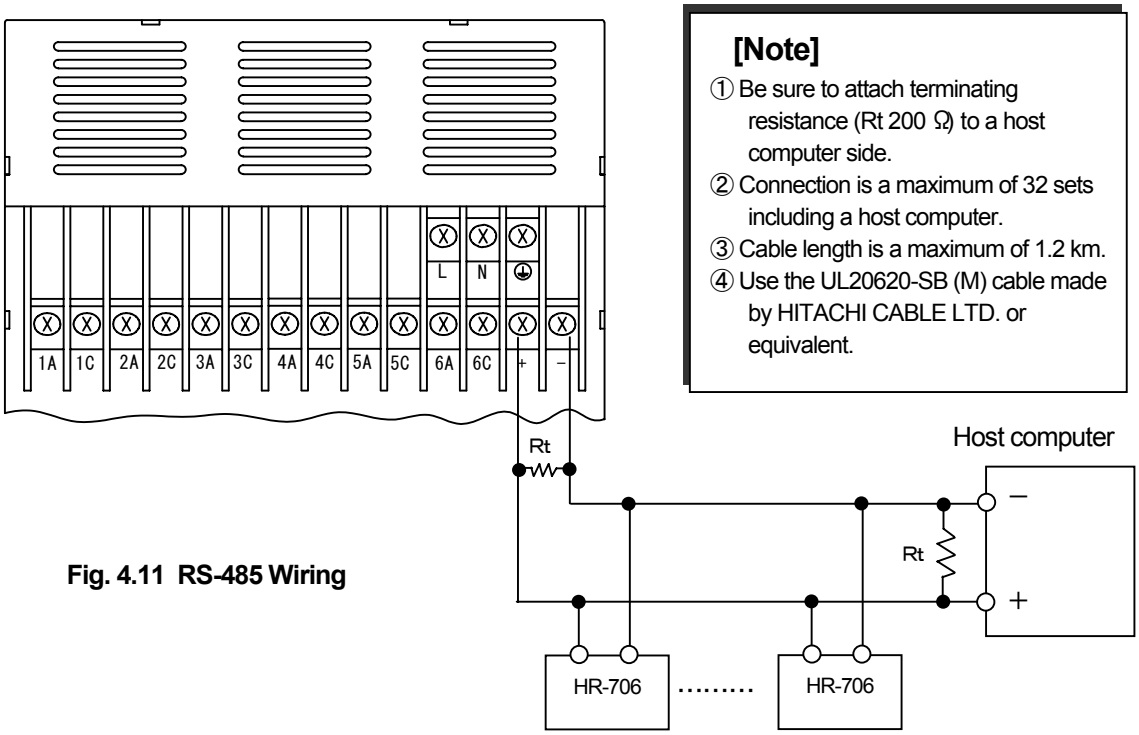

[Note]
① Be sure to attach terminating resistance (Rt 200 Ω) to a host computer side.
② Connection is a maximum of 32 sets including a host computer.
③ Cable length is a maximum of 1.2 km.
④ Use the UL20620-SB (M) cable made by HITACHI CABLE LTD. or equivalent.

Fig. 4.11 RS-485 Wiring

For safety using

Thank you for purchasing our HR-706 type Hybrid Recorder.

In order to use this instrument all of its functions effectively and correctly, read and understand this instruction manual thoroughly before using the instrument.

The symbols below are used on this instrument for the cautioning information.

Symbols used on the instrument	
⚠	This shows “Caution for handling”. This symbol is used on the parts need to refer to the instruction manual for protecting human body and the instrument.
⏚	This shows “Protective grounding”. Be sure to provide protective grounding prior to the operation of this instrument.
⚡	This shows “Risk of electric shock”. This symbol is used on the parts, which has a risk of electric shock.

Be sure to observe the following warnings/cautions and those written in this manual in order to secure safety when using this instrument.	
⚠ **WARNING**	
General	In order to prevent electric shock; be sure to disconnect this instrument from the main power source when wiring it.
Protective Grounding	(1) In order to prevent an electric shock; be sure to provide protective grounding prior to turning on this instrument. (2) Do not cut a protective grounding conductor or disconnect protective grounding.
Power Source	(1) Make sure that the supply voltage for this instrument conforms to the voltage of the supply source. (2) Attach a protective cover prior to turning on this instrument.
Working Environment	Do not operate this instrument in the environment where it is exposed to a combustible/explosive/corrosive gas or water/steam.
Input and Output Wiring	Provide input and output wiring after turning off the power.

⚠ CAUTION

Input and Output Wiring	Do not use unused terminals for other purposes such as relaying, etc.
Transportation	Do not touch the switches, etc. inside this instrument. Also, do not replace the main unit or printed circuit boards. When this is neglected, we cannot guarantee functioning of the instrument. Contact our dealer where you purchased the instrument, or our sales representative.
Inside of Instrument	When transporting this instrument or the equipment with this instrument incorporated in it, take measures to prevent opening the door and falling out the inner module.

[Note]

Instruction Manual	(1) Deliver this instruction manual to an end user. (2) Prior to handling this instrument, be sure to read this manual. (3) If you have any questions on this manual or find any errors or omissions in this manual, contact our sales representative. (4) After reading this manual, keep it carefully near the instrument. (5) When the manual is lost or stained, contact our sales representative. (6) It is prohibited to copy or reproduce this manual without our permission.
Installation	(1) When installing this instrument, put on a protective gear such as safety shoes, helmet, etc. for your safety. (2) Do not put your foot on the installed instrument or get on it, because it is dangerous.
Maintenance	Only our servicemen or people authorized by Shinko are allowed to remove and take the inner module, the main unit and PRINTed circuit boards apart.
Disposal	(1) Dispose the replaced batteries in a correct way. (2) Do not incinerate plastics of maintenance parts and replacement parts. A harmful gas may be produced.
Cleaning	(1) Use dry cloth to clean the surface of this instrument. (2) Do not use any organic solvent. (3) Clean the instrument after the power is turned off.
Revisions	This instruction manual is subject to change without prior notice.

Using procedure for this manual

1.Using procedure

This instruction manual consists of “For safety using”, “Contents” and “Chapter 1 to Chapter 11” as below.

Read the corresponding sections for your purpose to use this instrument.

Chapter and TITLE	For purchase and install	For initial setting and change setting	For daily operation	For using communication	For maintenance and trouble-shooting
For safety using (page 1)	◎	◎	◎	◎	◎
1. INTRODUCTION	◎				
2. CONSTRUCTION	○	○	○		○
3. INSTALLATION	◎		○		
4. WIRING	◎	○	○	○	○
5. PREPARATIONS FOR OPERATION		○	◎		
6. OPERATION		○	◎		
7. DEVICE SETTING		◎		○	○
8.COMMUNICATIONS				◎	
9. MAINTENANCE					◎
10. TROUBLESHOOTING		○			◎
11. SPECIFICATIONS	○	○			○

◎ : Be absolutely certain to read this.
○ : Be certain to read this if you need.

The symbols below are used on the warning and cautioning information in this manual.

Symbols used in this manual	
⚠ **WARNING**	Failure to observe this information could result in death or injury. Be absolutely certain to read this.
⚠ **CAUTION**	Failure to observe this information could damage the instrument. Be certain to read it.
[Note]	This is cautionary information for correct use of the instrument. Be certain to read it.
[Reference]	This is information to help you use the functions of this instrument more effectively.

2.Guide of Instruction manual

The instruction manuals of this instrument are as the table below.

		Name	Part No.	Outline
This manua ⇨	1	HR-700 Hybrid Recorder (Multipoint type) instruction manual	No.HR71E	Explanation for installing, wiring, standard operation. And setting or operation for using this instrument.
	2	HR-700 Hybrid Recorder Communication Command instruction manual	No.HR7CE	Explanation for reading and writing data of the recorder by communication function.

CONTENTS

1. INTRODUCTION 6
1.1 Checking the Accessories 6
1.2 Checking the Type and Specifications 7
1.3 Temporary Storage 8
1.4 Indication Card 8

2. CONSTRUCTION 9
2.1 Appearance 9
2.2 Display Screen and Operation Keys 10
2.2.1 Display Screen 10
2.2.2 Operation Keys 11

3. INSTALLATION 12
3.1 External dimensions and panel cutout 12
3.2 Mounting to the Panel 13
3.2.1 Procedure for Mounting to the Panel 13
3.2.2 Mounting to the Panel in compliance with the IP65 14

4. WIRING 15
4.1 Terminal Layout and Power Wiring 15
4.1.1 Terminal Layout 15
4.1.2 Power Wiring 15
4.1.3 Wiring Procedure 16
4.2 Input Wiring 17
4.2.1 Wiring Procedure 18
4.3 DI function/Alarm Output Wiring (Option) 20
4.3.1 DI function/Alarm Output Wiring Example 20
4.3.2 Alarm Output Wiring Procedure 21
4.3.3 DI function Wiring Procedure 21
4.4 Communication Wiring 22
4.4.1 RS-232C Wiring 22
4.4.2 RS-485 Wiring 22

5. PREPARATIONS FOR OPERATION 23
5.1 Setting the Chart Paper 23
5.2 Setting the Ribbon Cassette 29

6. RUNNING 31
6.1 Running 31
6.1.1 Status after Initial Screen 31
6.2 Recording 32
6.2.1 Recording Colors 32
6.3 How to Record 32
6.3.1 Starting/Stopping Recording Operation 32
6.3.2 Feed the Chart Paper 32
6.3.3 Print Sample 33
6.4 Digital Print 34
6.4.1 Manual Print 34
6.4.2 List Print 35
6.4.3 Engineering List Print 37
6.5 Changing the Display 39
6.5.1 Auto Display <Auto> 39
6.5.2 Manual Display <Man> 39
6.5.3 Date Display <dAtE> 39
6.5.4 Time Display <tI ME> 39
6.5.5 Display Off <oFF> 39

7. DEVICE SETTING 40
7.1 Setting the Setup Mode 40
7.1.1 Setting the Range 43
(1) Setting method 43
(2) Volt (Current/Voltage), tC (Thermocouple), rtd (Resistance Temperature Detector) 44
(3) SCALE (Scaling) 46
(4) SQrt (Square Root) 48
(5) dECAd (Decade) 50
(6) dELt (Difference), SI GA (Sum), AEAn (Average) 52
(7) SKI P (Skip) 53
7.1.2 Setting the Alarm 54
7.1.3 Setting the Unit 56
(1) Character Code Table 57
7.1.4 Setting the Chart feed Speed 58
7.1.5 Setting the Date and Time 59
7.1.6 Copying the Setting Data 60
7.1.7 Setting Other Functions 61
(1) trEnd (Printing Cycle) 62
(2) ZonE (Zone Recording) 62
(3) PArt (Partial Compression/Expansion) 63
(4) Pri nt (Digital Print) 64
(5) tAG (Tag) 65
(6) CAnt (Comment Words) 66
7.2 Setting the Engineering Mode 67
7.2.1 Alarm Hysteresis 70
7.2.2 Burnout ON/OFF 70
7.2.3 Channel Offset 70
7.2.4 Reference Junction Compensation 71
7.2.5 Changing the Printing Color 72
7.2.6 Settings Related to Recording 73
(1) Recording start/stop trigger setting 73
(2) Tag/channel print selection 73
(3) Alarm print ON/OFF 74
(4) Logging print ON/OFF 74
(5) Scale print ON/OFF 75
(6) Logging print Synchronous/Asynchronous 75
7.2.7 Setting the Communication Function 76
7.2.8 Initializing the Setup Data 76
7.2.9 DI functions 77
7.2.10 Temperature Unit 77
7.2.11 Point Calibration 78
7.2.12 Data Calibration 79
7.3 Terminating the Engineering Mode 81

8. COMMUNICATIONS 82
8.1 General Description 82
8.1.1 General Description of Functions 82
8.1.2 Transmission Specifications 82
8.1.3 Data Structure 82
8.2 Opening/Closing the Link 83
8.2.1 Open Command 83
8.2.2 Close Command 83
8.3 Outputting the Process Variable 84
8.3.1 Specifying the Process Variable Output 84
8.3.2 Updating the Data 84
8.3.3 Specifying the Process Variable Data Output Order (At BINARY Mode Output) 84
8.3.4 Outputting the Data 84
8.3.5 Process Variable Transmission Format (ASCII) 85
8.3.6 Process Variable Transmission Format (BINARY) 86
8.4 Outputting the Unit and Decimal Point Position Data 87
8.4.1 Specifying the Unit and Decimal Point Position Data Output 87
8.4.2 Updating the Data 87
8.4.3 Outputting the Data 87
8.4.4 Data Format 87
8.5 Outputting the Status 88
8.5.1 Status Output Command 88
8.5.2 Status Output 88
8.6 Data Reception Example 89

9. MAINTENANCE 90
9.1 Inspection 90
9.2 Cleaning 90
9.3 Replacing Consumables 91
9.4 Adjust Dot Printing Position (Point Calibration) 91
9.5 Calibration (Data Calibration) 91
(1) Calibration of Voltage 92
(2) Calibration of Resistance temperature detector 92
(3) Calibration of Reference Junction Compensation 93

10. TROUBLESHOOTING 94
10.1 Troubleshooting 94
10.1.1 Trouble Items 94
10.1.2 When the Recorder Dose not Work at All 94
10.1.3 When there is a Big Error 95
10.1.4 When the Trend Recording is Deflected 95
10.1.5 When Nothing is Recorded 96
10.1.6 When Recording is Faint 96
10.1.7 When the Chart Paper is not fed at All 97
10.1.8 When the Chart Paper is not fed Properly 97
10.2 Self Diagnostics Function (ERROR) 98
10.2.1 Self Diagnostic Items 98
10.2.2 Error Display 99

11. SPECIFICATIONS 100
11.1 Common Specifications 100
11.1.1 Input Signal 100
11.1.2 Performance and Characteristics 100
11.1.3 Structure 101
11.1.4 Power Source 101
11.1.5 Normal Operating Conditions 101
11.1.6 Alarm Output (Optional : LH6) 102
11.1.7 Safety Standard and EMI Standard 102
11.1.8 DI Function (Option : RE6) 102
11.1.9 Paper-empty Detecting Function (Option : FL) 102
11.2 Standard Specifications 103
11.2.1 Measurement Range 103
11.2.2 The Accuracy at the Computation 106
(1) Scaling 106
(2) Square root computation 106
(3) Decade 107
(4) Difference, Sum, and Average 107
11.2.3 Individual Specifications 108
11.2.4 Standard Functions 109
11.3 Standard Setting Functions 110
11.3.1 Standard Setting Functions 110
11.4 Optional Functions 110
11.4.1 Remote Function of DI 110
11.4.2 Alarm Board 110
11.4.3 Communication unit 110

1. INTRODUCTION

1.1 Checking the Accessories

Upon delivery of this instrument, unpack and check its accessories and appearance.

If there are any missing accessories or damage on the appearance, contact our dealer where you purchased the instrument, or our sales representative.

Following accessories should be attached.

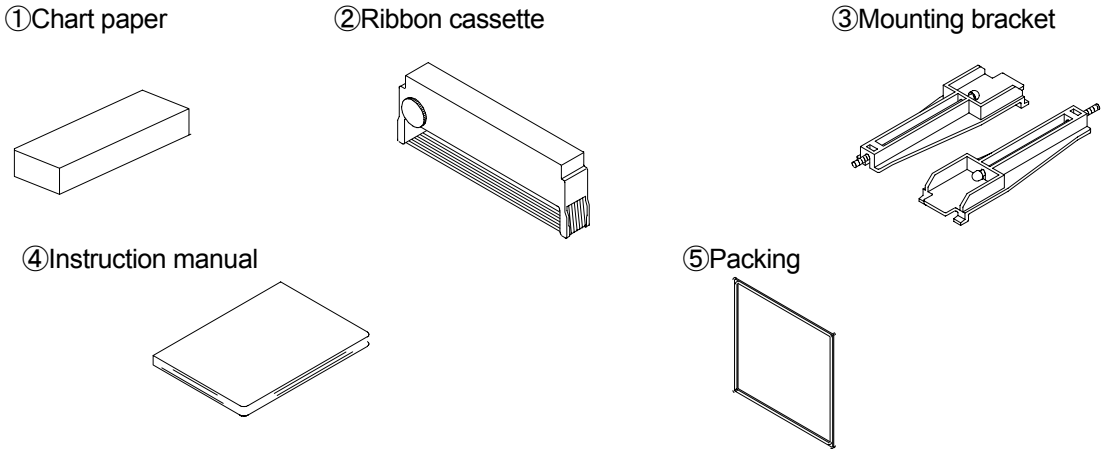

Fig. 1.1 Accessories

Table 1.1 List of Accessories

No.	Part Name	Type	Quantity	Remarks
1	Chart paper	H-10100	1	100 equal divisions
2	Ribbon Cassette	WPSR188A000001A	1	
3	Mounting bracket	H4A14175	2	Panel mounting bracket
4	Instruction manual	HR71E	1	This manual
5	Packing	H4H14900	1	For IP65

[Note]

The ribbon cassette has been set in the instrument when this is shipped.

1.2 Checking the Type and Specifications

A nameplate is put on the inside of the instrument. Remove the chart holder and make sure that the nameplate is put in the middle far side of the instrument.

Make sure that this instrument meets your requested specification, seeing the following tables.

Table 1.2 Type

HR-706, □□□			144(W)×144(H)×150(D)mm
Measuring point	6		6 points
Options		C5	Communication function (RS-485)
		RE6	DI function
		FL	Out of paper detection function
		LH6	Alarm output function

1.3 Temporary Storage

Store the instrument in the following environment.

When incorporated in the equipment, store it in the following environment as well.

⚠ CAUTION

Storage in a poor environment may damage the appearance, functions, and service life of the instrument.

Storage Environment

- A place with little dust.
- A place free from combustible, explosive, or corrosive gases (SO_2, H_2S, etc.).
- A place free from vibrations or shocks.
- A place frees from water or steam or high humidity (95% RH max.).
- A place free from direct sunlight or high temperature (50℃ max.).

1.4 Indication Card

An indication card has been affixed to the door upon delivery. Enter a name as required.

⚠ CAUTION

Note that if a non-original nameplate is attached, it may damage the door or mounting part.

2. CONSTRUCTION

2.1 Appearance

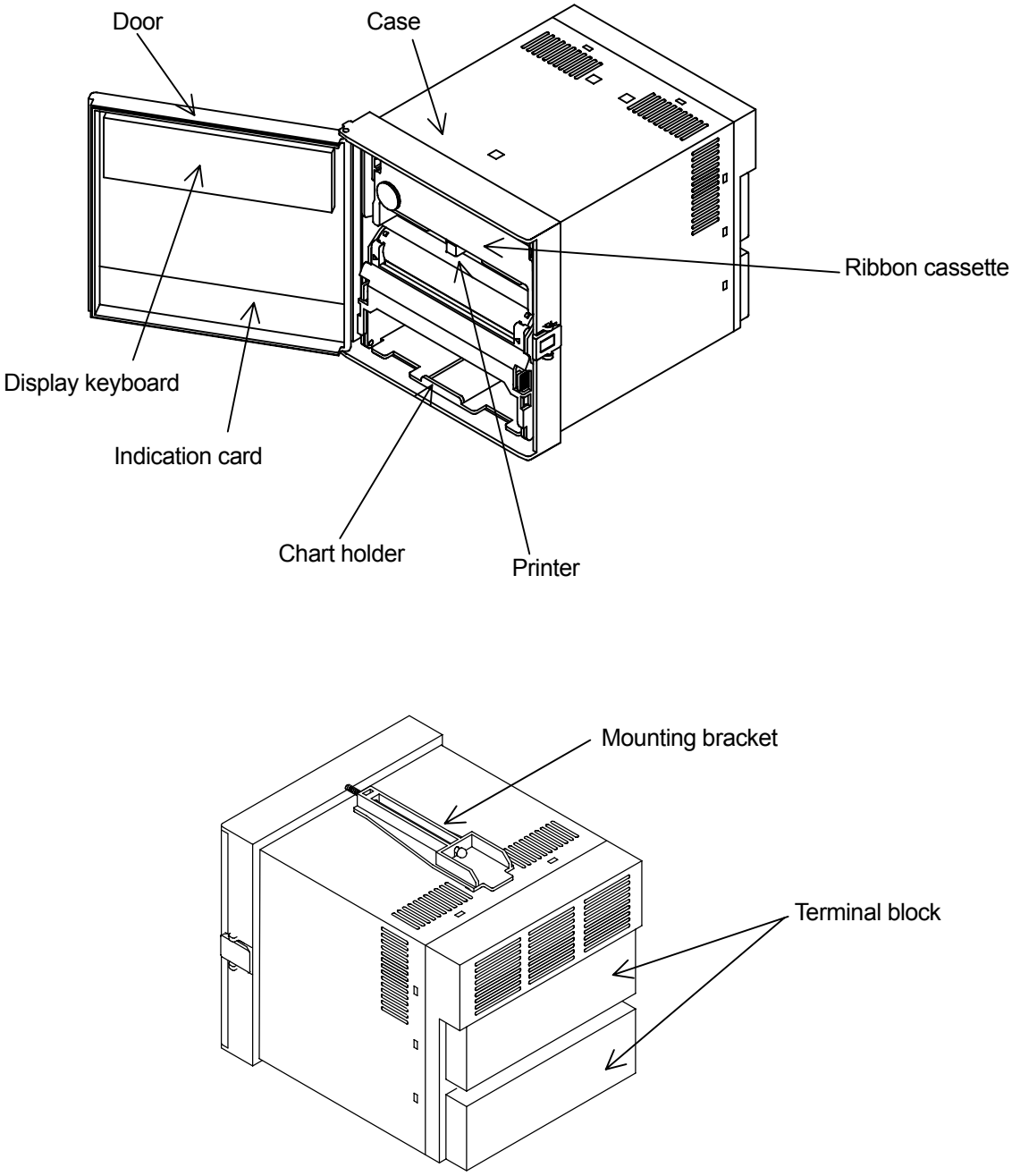

Fig. 2.1 Appearance

2.2 Display Screen and Operation Keys

2.2.1 Display Screen

The following describes the display screen. Since the channel numbers and data are indicated by a 7-segment LED, alphabets are symbolized to represent them.

For the LED display, see " Symbolized Alphabets for Display" at [Reference] below.

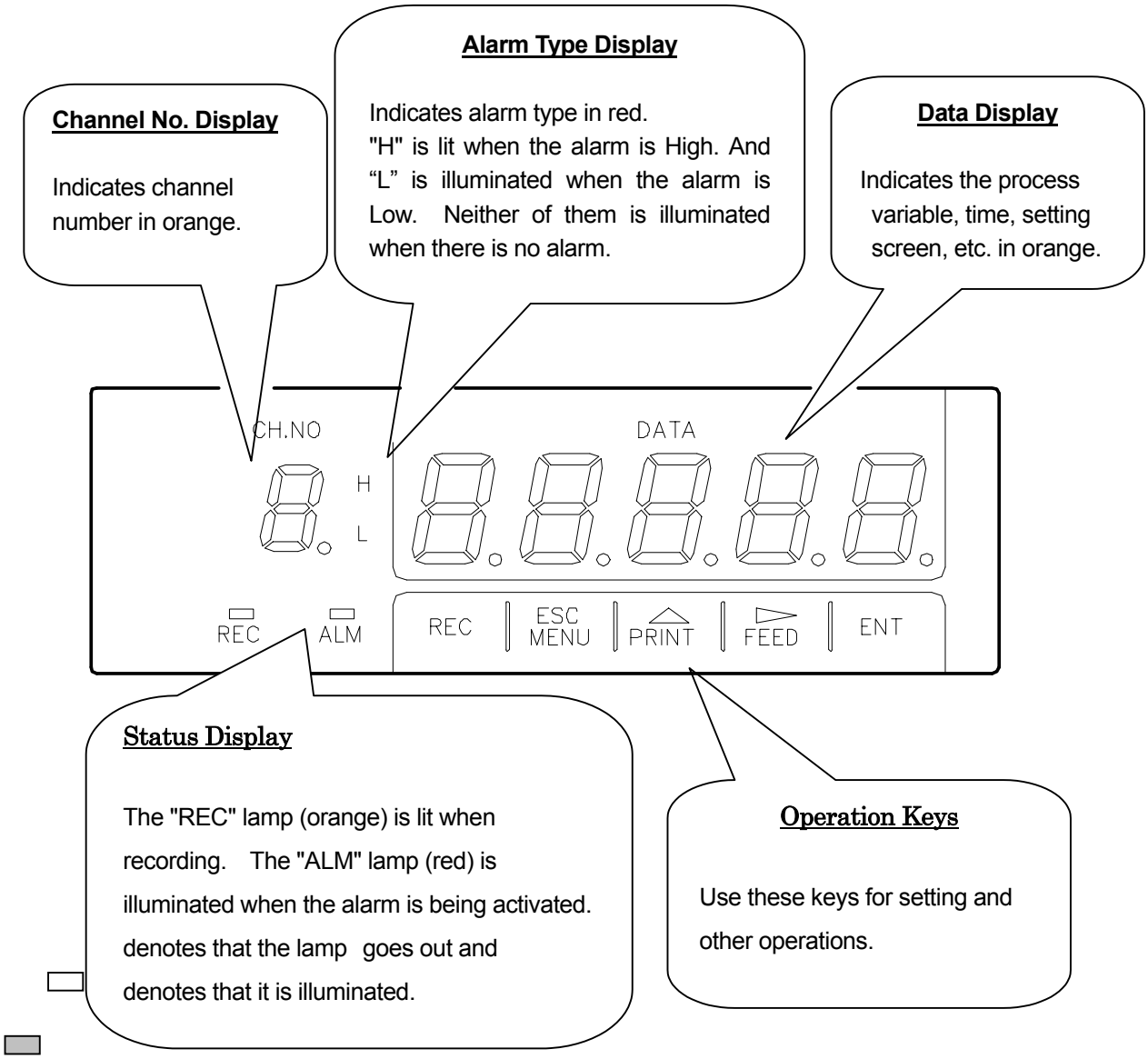

Fig. 2.2 Display

[Reference] Symbolized Alphabets for Display

Display	A	b	C	d	E	F	G	H	h	I	J	K	L	l
Alphabet	A	B	C	D	E	F	G	H	h	I	J	K	L	l
Display	n	n	o	P	q	r	S	t	U	V	W	X	Y	Z
Alphabet	M	N	O	P	Q	R	S	T	U	V	W	X	Y	Z

2.2.2 Operation Keys

The following describes the functions of each operation key.

The actual operation keys are represented as shown in the figure below in this manual.

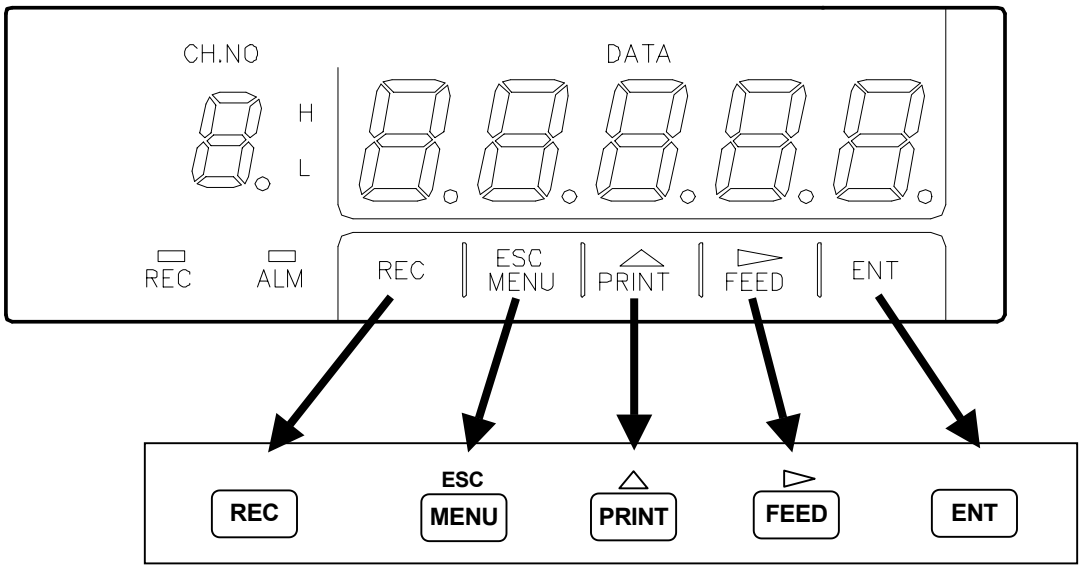

Fig. 2.3 Actual Display and Operation Keys

Table 2.1 Names of Operation Keys and Their Functions

Key	Name	Function	
REC	"REC" key	Starts/stops recording. To stop, press the "REC" key for 3 seconds or more. (Puts out the "REC" lamp.) To start, press the "REC" key. (Lights the "REC" lamp.)	
ESC MENU	"MENU" key	MENU function	Selects engineering list print and changes the mode to the setting mode.
	"ESC" key	ESC function	Exits that menu halfway while selecting a function.
△ PRINT	"PRINT" key	PRINT function	Used to perform manual print or list print.
	"△" key	△ function	Used to select a setting parameter (numeral or built-in command)(ascending direction).
▷ FEED	"FEED" key	FEED function	The chart paper is fed while the key is pressed, and stopped when released.
	"▷" key	▷ function	Used to shift a digit in setting a numeral.
ENT	"ENT" key	Used to register a setting parameter (numeral or built-in command) after selecting it, or executing a function. Pressing this key executes the setting.	

3. INSTALLATION

3.1 External dimensions and panel cutout

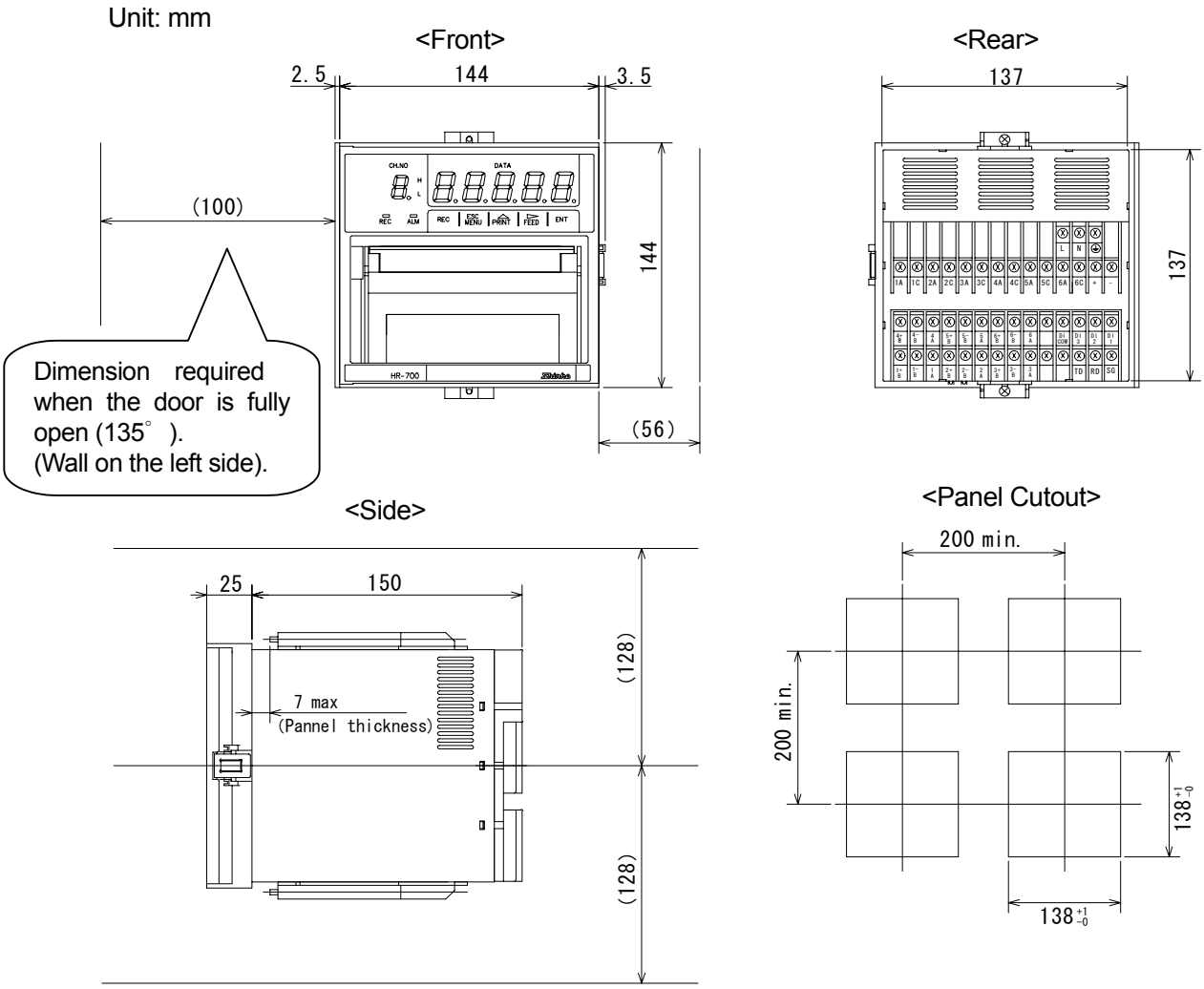

Fig. 3.1 External dimensions and panel cutout

⚠ CAUTION

For maintenance and using the instrument safely, it is recommended that spaces larger than the size written in the bracket be secured per unit.

3.2 Mounting to the Panel

⚠ WARNING

Do not install the instrument in a place exposed to combustible, explosive, or corrosive gas (SO_2, H_2S, etc.).

⚠ CAUTION

Install the instrument in the following places

- A place without rapid humidity change.
- A place of normal temperature (25℃ or so).
- A place exposed to as little mechanical vibrations as possible.
- A place with as little dusts as possible.
- A place affected by the electromagnetic field as little as possible.
- A place not directly exposed to high radiant heat.
- A place where the altitude is up to 2000m.
- Humidity has an effect on the chart paper and ink. Use the instrument in a humidity range of 20 to 80%RH (60%RH is optimum).
- This instrument needs the inside installation.

Mounting to the Panel

- A steel plate not thinner than 1.2mm is recommended as a mounting panel.
- The maximum thickness of the mounting panel is 7mm.

Inclination

- Install the instrument horizontally.
- The instrument should be installed so that its inclination should be 0° at the front and within 30° at the rear.

3.2.1 Procedure for Mounting to the Panel

1) Assemble the mounting bracket referring to Fig.3.2.
2) Insert this instrument through the front of the panel.
3) Hook claws of the mounting bracket at the square holes on the top and bottom surfaces of the case.
4) Tighten the screw of the mounting bracket with a screwdriver to attach it to the panel. When the mounting unit does not move back and forth any more, tighten a screw by 180°.

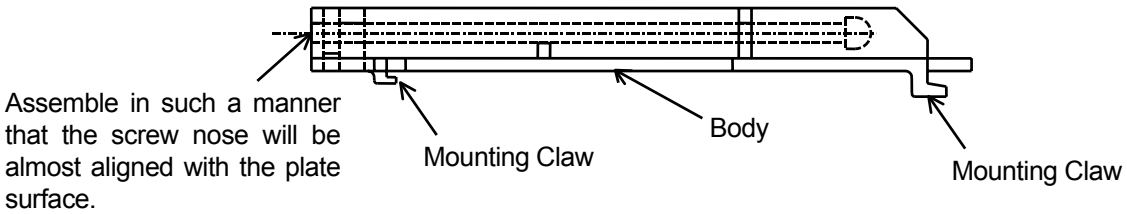

Fig. 3.2 Mounting bracket

[Note]

If it is tightened with an excessive force, the case may be distorted and the mounting bracket may be deformed. An adequate tightening torque is about 0.2 to 0.3 N·m (2～3 kgf·cm).

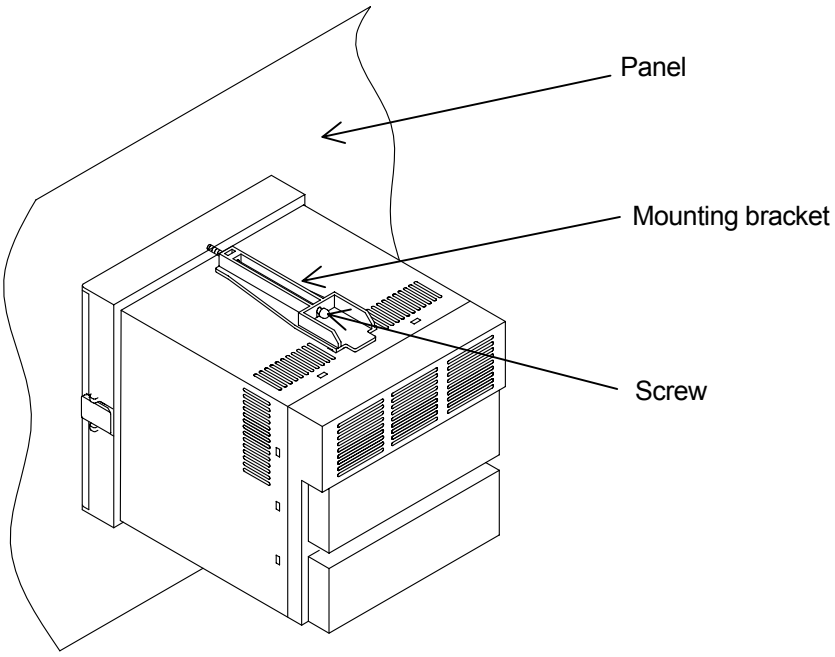

Fig. 3.3 Mounting to the Panel

3.2.2 Mounting to the Panel in compliance with the IP65

Prior to mounting the instrument to the panel, attach a packing to the position shown in the figure. The rest of the procedure is the same.

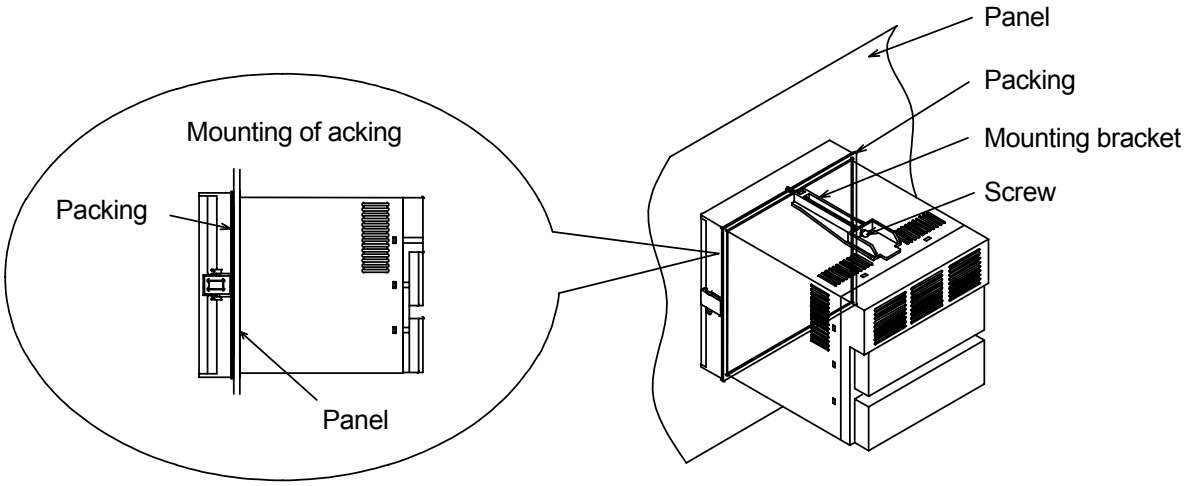

Fig. 3.4 Mounting to the Panel（in compliance with the IP65）

5. PREPARATIONS FOR OPERATION

5.1 Setting the Chart Paper

⚠ CAUTION

It is recommended our original chart paper be used to ensure proper recording. If the chart paper holder is taken out with recording operation being activated, the ink ribbon may be damaged. To replace the chart paper, be sure to press the "REC" key to stop recording.

(1) Pressing the "REC" key for 3 seconds or more

Stop recording operation. With the power turned on, press the "REC" key for 3 seconds or more.

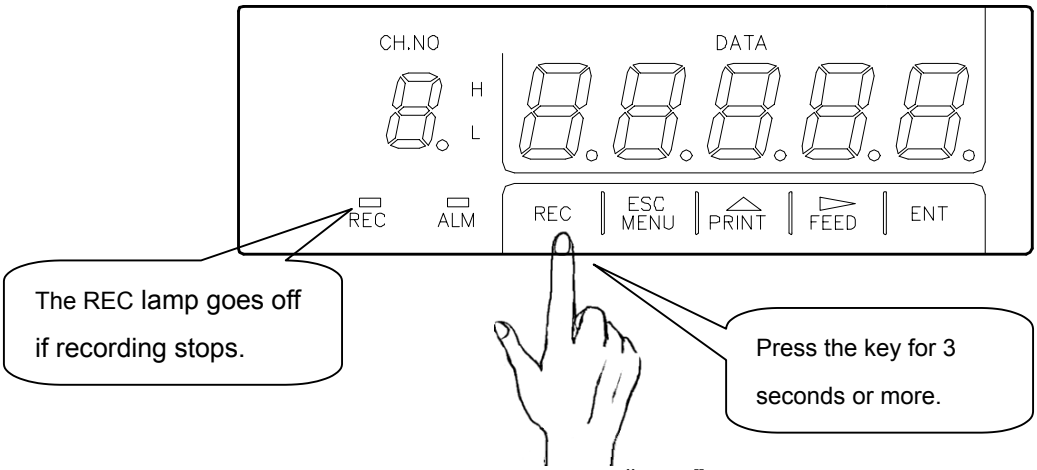

Fig. 5.1 Pressing the "REC" key

(2) Opening the Door

⚠ CAUTION

Maximum angle of the door is 135 degrees when the door is fully open. Do not open the door further, or the hinge will be broken.

Push the door hook to unlock the door. Pull out the door to open it.

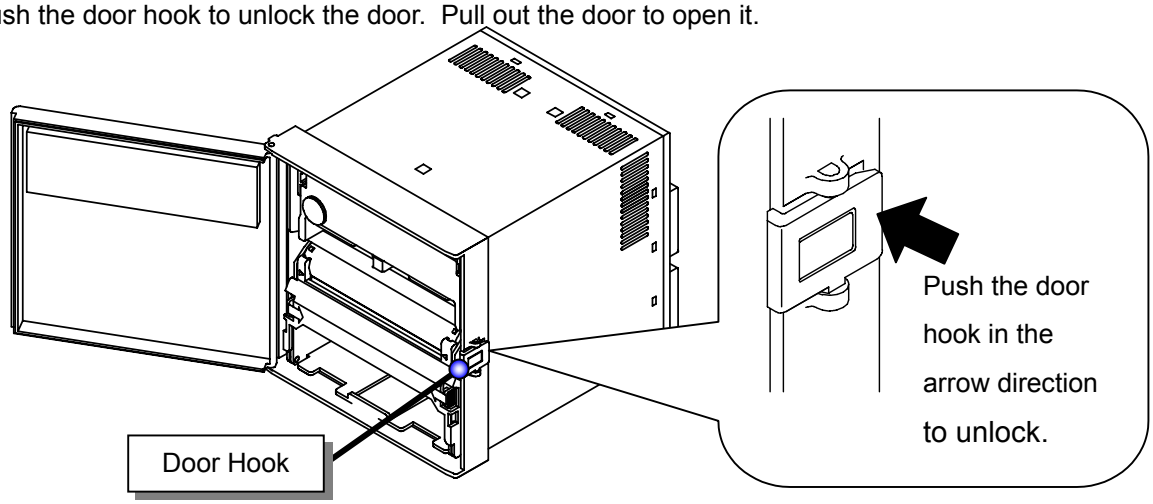

Fig. 5.2 Opening the Door

(3) Pulling out the Chart Holder

Put your fingers onto the levers at both sides of the chart holder and pull it out.

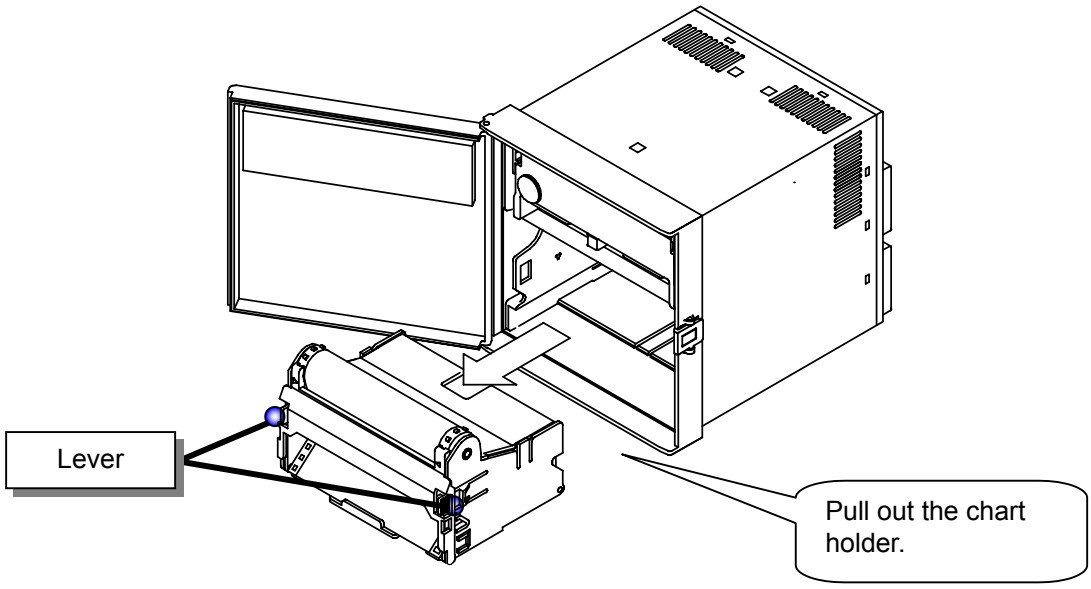

Fig. 5.3 Pulling out the Chart Holder

(4) Opening the Chart Cover and Chart Guide

Open the chart guide and the chart cover outward.

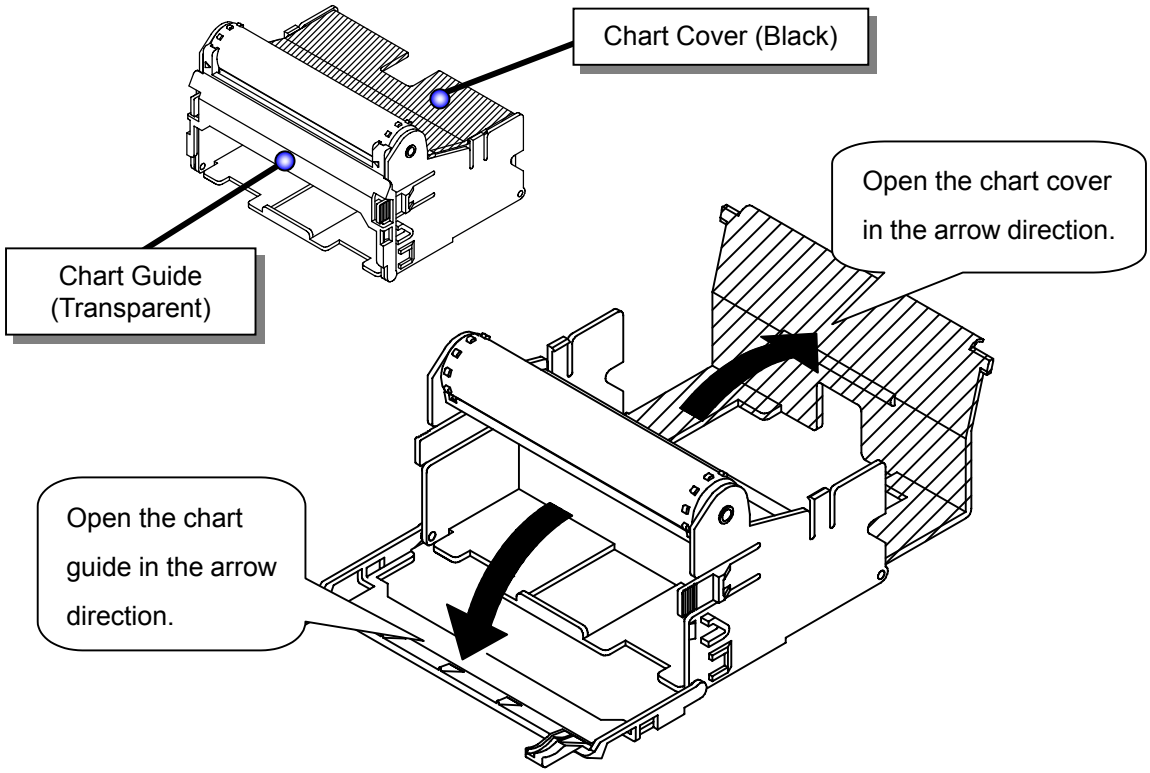

Fig. 5.4 Opening the Chart Cover and Chart Guide

(5) Loosening the chart paper

The chart paper may not be proper fed, if it is stuck at perforations. Be sure to loosen the paper.

Fig. 5.5 Loosening the Chart Paper

(6) Setting the Chart Paper into the Storage Chamber

Unfold the 2 sections of chart paper. Holding the printing surface upward, set it in the storage chamber.

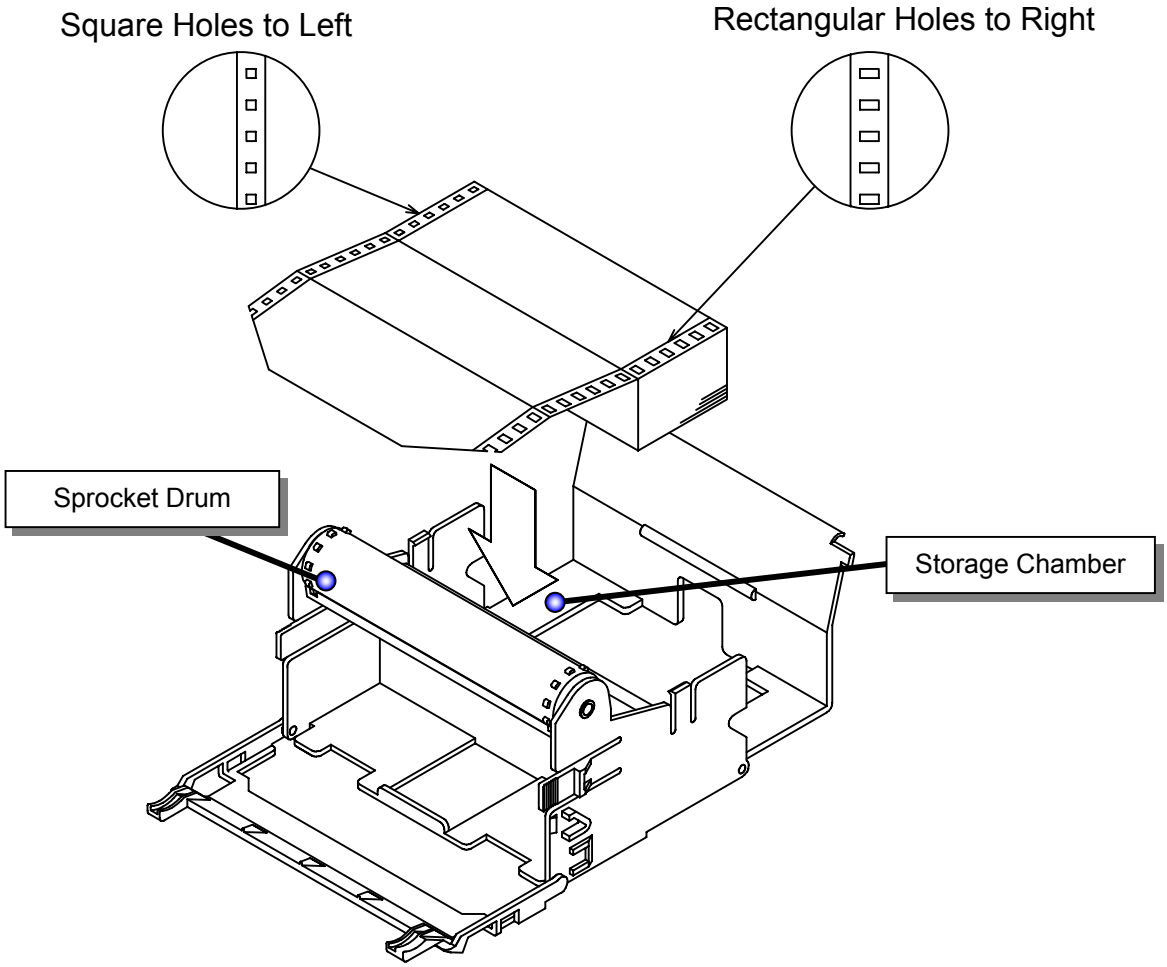

Fig. 5.6 Setting the Chart Paper

(7) Aligning the Chart Paper with the Sprocket Drum

Align the holes in the chart paper with the sprocket drum teeth. Set the chart paper along with the sprocket drum. Put the first ply of the chart paper into the chart receiver.

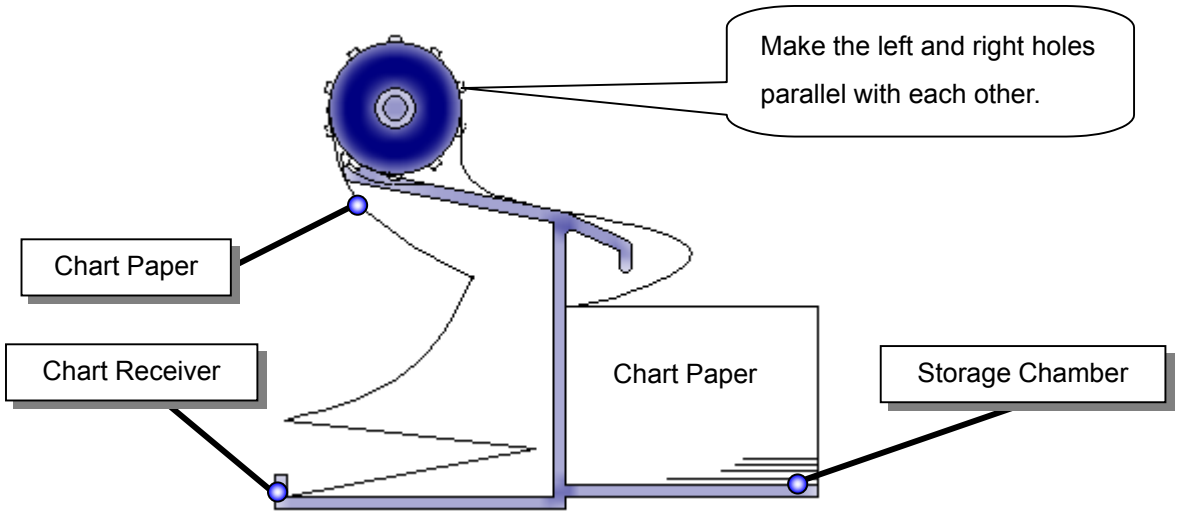

Fig. 5.7 Aligning the Chart Paper with Sprocket Drum (Chart Holder Sectional View)

(8) Closing the Chart Cover and Chart Guide

Close the chart cover and the chart guide in the arrow directions.

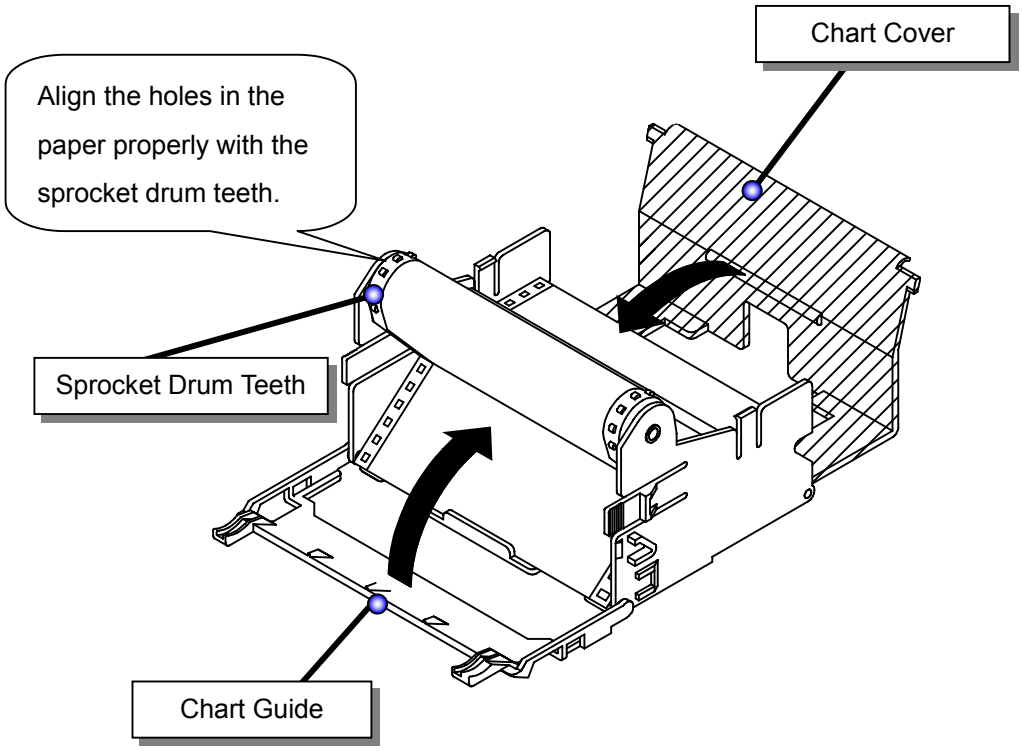

Fig. 5.8 Closing the Chart Cover and Chart Guide

(9) Turning the Sprocket Drum Gear

Check paper feed with your hand. Turn the sprocket drum gear to feed out the chart paper. (It is recommended 4 sections of chart paper be fed out.)

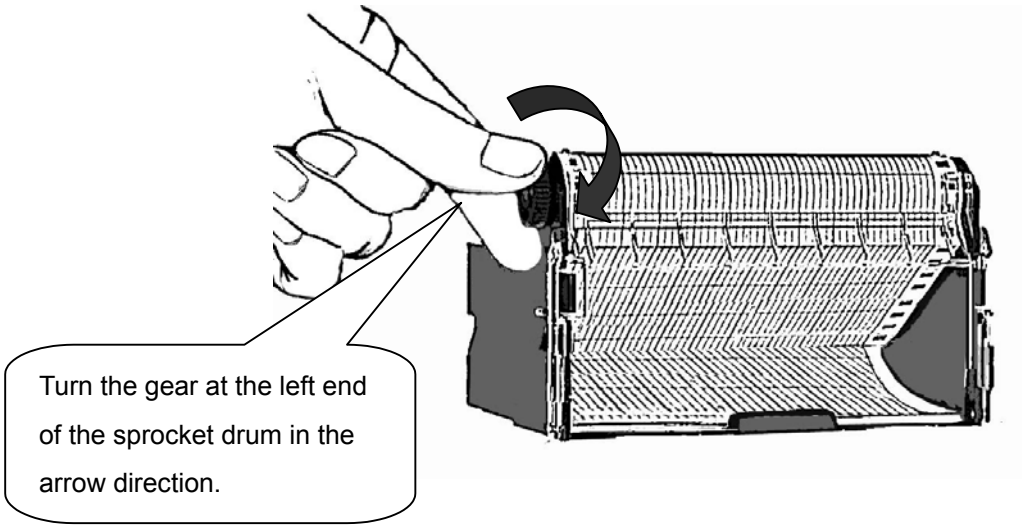

Fig. 5.9 Checking Paper Feed

(10) Putting the Chart Paper Holder

Insert the chart holder horizontally into the case until it is locked.

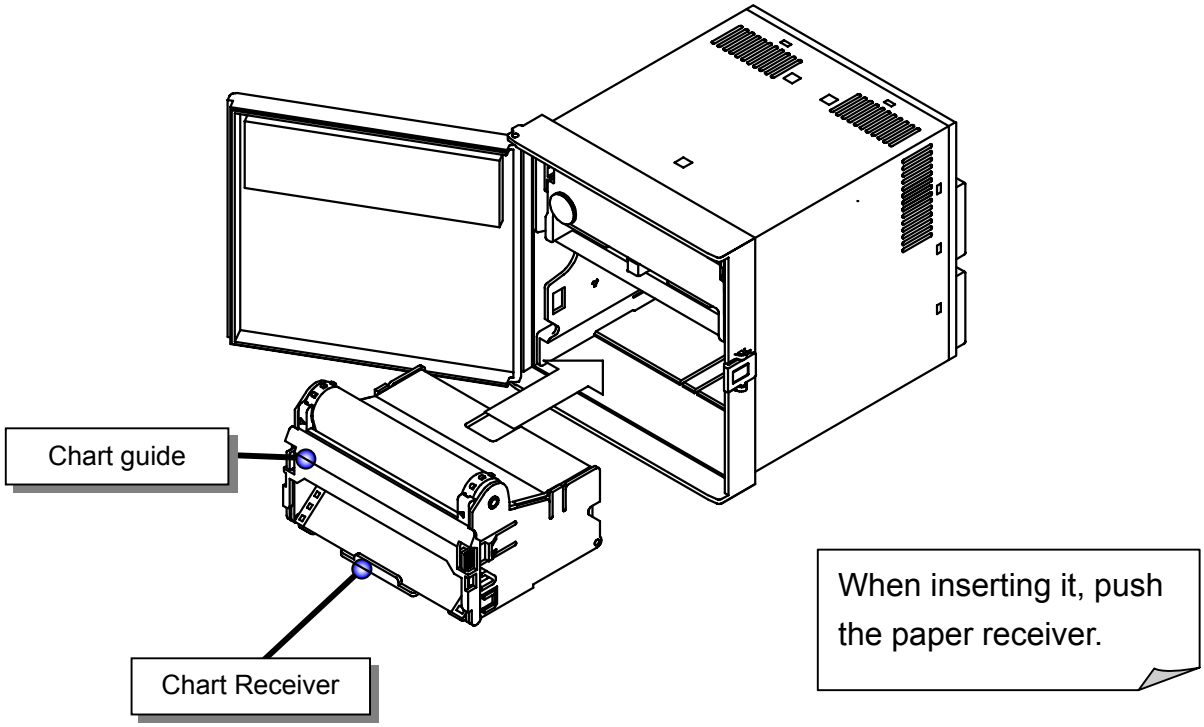

Fig. 5.10 Putting Back the Chart Holder

(11) Close the Door

Close the door and check a door lock.

(12) Pressing the “FEED” key to Check Paper Feed

Press the “FEED” key on the display keyboard to feed the chart paper.

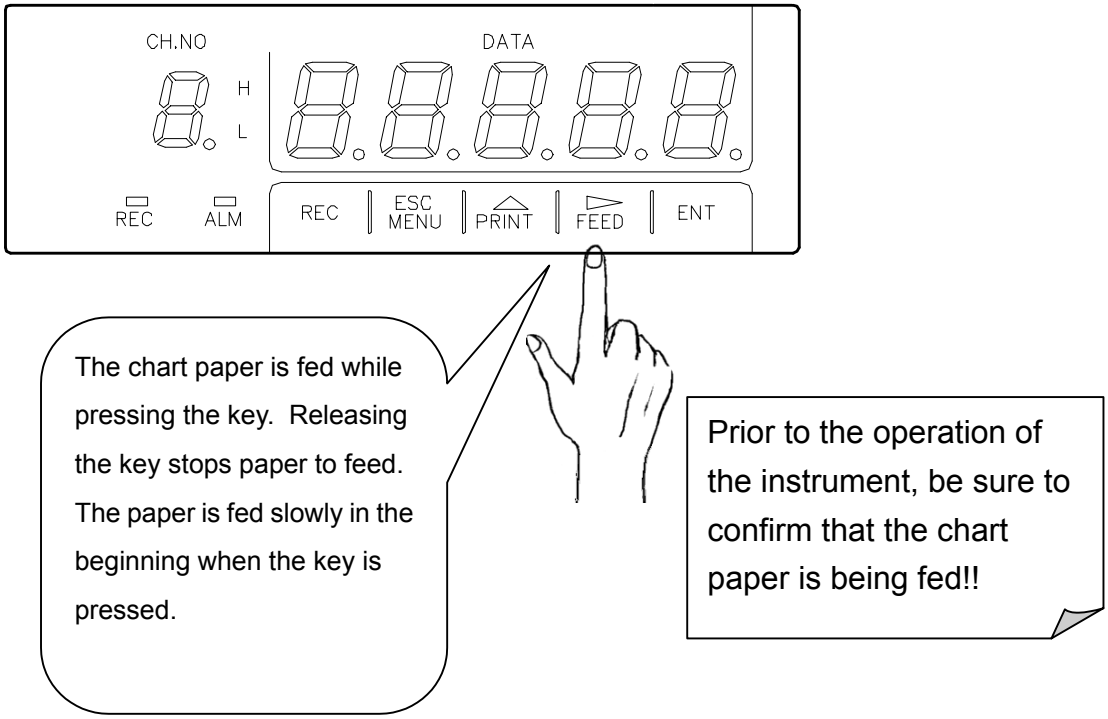

Fig. 5.11 Pressing the “FEED” key

(13) Pressing the “REC” Key to Restart Operation

5.2 Setting the Ribbon Cassette

⚠ CAUTION

If the chart holder is taken out with recording operation being activated, the ink ribbon may be damaged. To replace the ribbon cassette, be sure to press the "REC" key to stop recording. If the ribbon cassette is not set properly, the recording color may change or the ribbon may be damaged.

(1) Pressing the "REC" key for 3 seconds or more

Stops recording. With the power turned on, press the "REC" key for 3 seconds or more.

Once recording stops, the REC lamp goes off.(See Fig. 5.1 on page 23)

(2) Opening the Door

Push the door hook to unlock the door. Pull the door to open it.

(See Fig.5.2 on page 23)

⚠ CAUTION

Maximum angle of the door is 135 degrees when the door is fully open. Do not open the door further, or the hinge will be broken.

(3) Pulling out the Ribbon Cassette

Grab the left side of the ribbon cassette. Holding down the ribbon holder, pull out the ribbon cassette to the front.

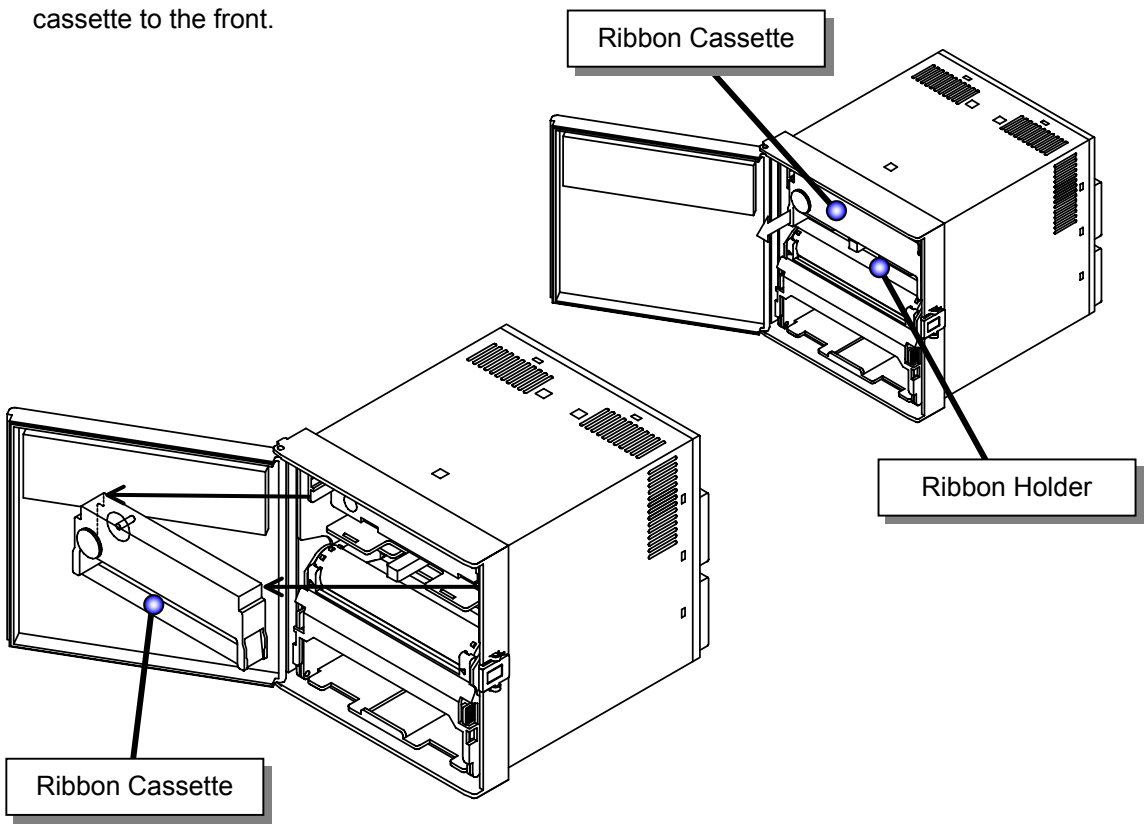

Fig. 5.12 Taking Out the Ribbon Cassette

(4) Unslacking the Ink Ribbon

Set the new ink ribbon. Turn the knob in the arrow direction to unslack the ink ribbon.

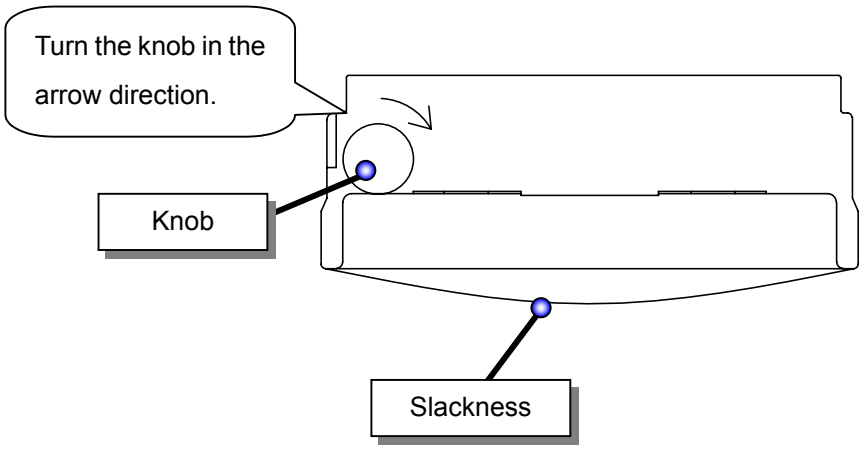

Fig. 5.13 Unslacking the Ink Ribbon

(5) Setting the Ribbon Cassette

Push the ribbon cassette into the ribbon holder until the latch clicks.

When the ribbon feeding shaft does not easily fit in, turn the gear in the direction of an arrow to adjust the position. When this is done, push the ribbon cassette until the latch clicks

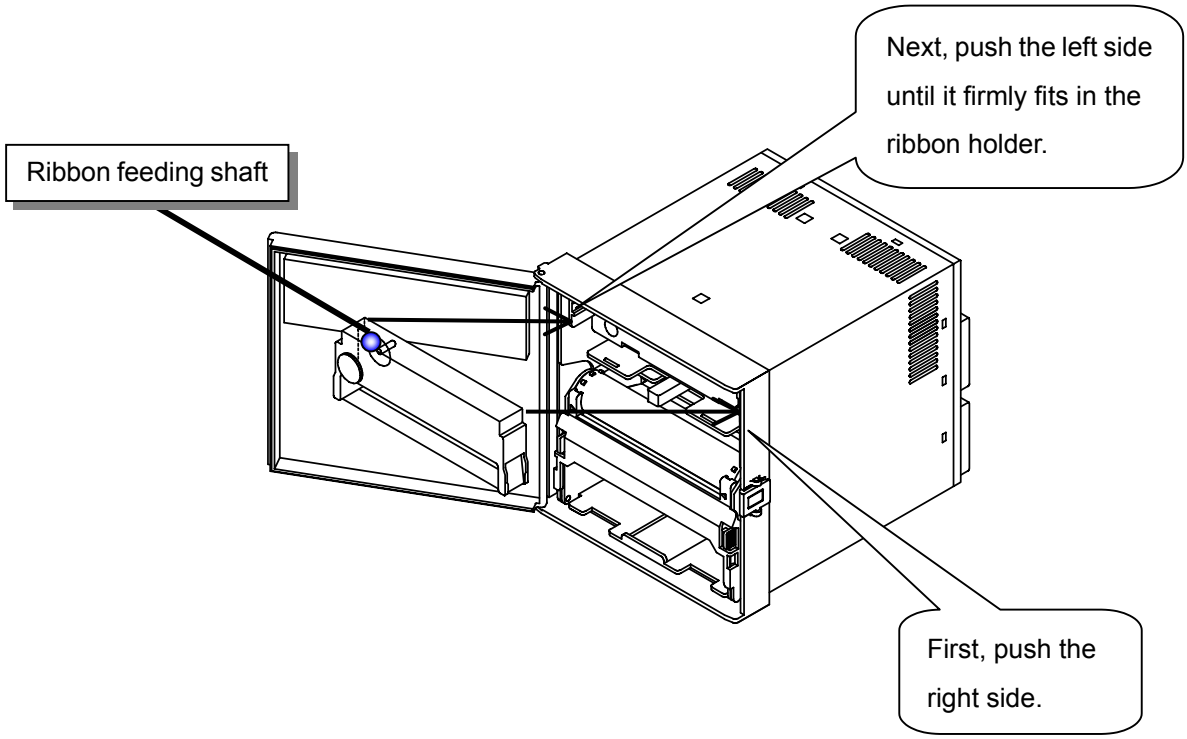

Fig. 5.14 Setting the Ribbon Cassette

6. RUNNING

6.1 Running

⚠ WARNING

Prior to turning on the power, make sure that the supply voltage meets the specifications for the instrument and the instrument is properly grounded.

⚠ CAUTION

This recorder has no power switch.
Prior to turning on the power, make sure that the chart paper is set in the chart holder.
If the printer is activated with no chart paper set, the sprocket drum (cylindrical part) of the chart holder may be damaged.

⚠ WARNING

When calibrating data, connect the equipment written in the Section 9.5 of the instruction manual.
Data calibration must be performed correctly.
Therefore, operators possessing knowledge of electricity and control related matters should perform the calibration after careful reading of Sections 7.2 and 9.5 of the instruction manual.
(Shinko Technos is not liable for damages incurred if calibration is performed other than

Once the power is turned on, the display on the front of the door lights. The instrument will be ready to run (user mode) in about 5 seconds, including the initial screen. If the REC lamp is unlit, press the "REC" key to start recording operation.

6.1.1 Status after Initial Screen

(1) Display screen :The "REC" lamp keeps the status of before power-off.
(2) Printout data :All printing data and analog recording data of before power-off are cleared.
(3) Alarm and Diagnosis :Alarm indications and outputs of before power-off are not recovered.
(4) Data display and Channel number are displayd as follows. Refer to Fig.6.1.

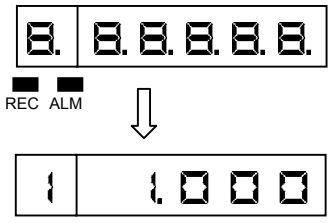

※Returning to the mode before the power OFF.

Fig. 6.1 Display Screen at Power-on

[Note]
① When electric power failed, the initialization is performed after power recovery. And it becomes the initial status.
② The printout data is eliminated in initialization. Printout operation is not continued after power recovery when the power is turned off during printout.
③ When power is turned on, "0" is indicated on the display until the data is retrieved. The number of digits indicated differ, depending on the setting.

6.2 Recording

⚠ CAUTION

① The instrument checks zero point for every recording. If the printer block is manually moved during recording, a recording position may be dislocated.

② In order to protect the chart paper, dot printing is not performed when the distance between the previous dot printing position and the next one for an identical channel is less than 0.3 ㎜ in the chart paper feed direction or less than 0.5 ㎜ in the scale direction.

6.2.1 Recording Colors

Table 6.1 lists the recording colors for each channel in analog recording.
You can select a recording color from 6 colors for every channel.

Table 6.1 Recording Colors(standard)

Channel No.	Color
1	Purple
2	Red
3	Green
4	Blue
5	Brown
6	Black

6.3 How to Record

6.3.1 Starting/Stopping Recording

To start/stop recording, press the "REC" key.
To stop, press the "REC" key for 3 seconds or more.
"REC" lamp is unlit when recording stops.

[Note]

① When the power is turned on, the previous status continues.

② When controlling a start/stop of recording through Digital Input DI function (option : RE6), start / stop cannot be switched by "REC" key.

6.3.2 Feeding the Chart Paper

The chart paper is fed while the "FEED" key is pressed, and stops when released.

6.3.3 Print Sample

Logging on print example and Alarm on print example

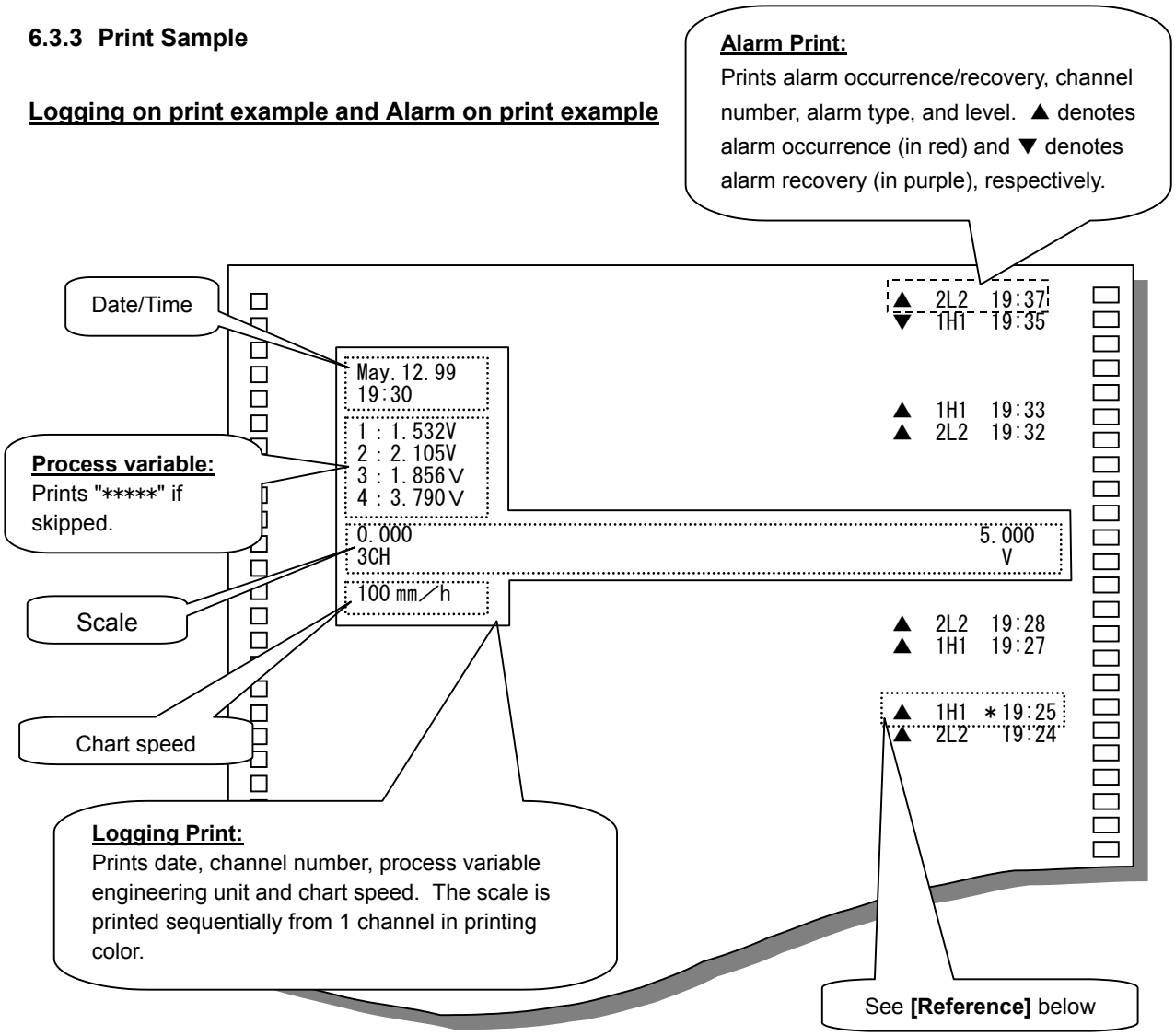

Fig. 6.2 Print Sample

[Reference]

Alarm print, Comment print and Date-and-Time print stand by if the other printing is actuated.
HR-706 stores up to six items of Alarm Occurrence/Recovery print and five items of Comment/Date-and-Time print. If printing commands are over, HR-706 prints a marking " ＊ " on the end of the last printing. This mark is meaning of that over items would not be printed.
For priority of respective printing, see next page; Priority in Reference.

[Note]

Logging print will not be the wait printing state. At the start time of Logging print, if the prior Logging print is printing, the next one cannot print. Prolong the printing interval of Logging print in this case.

6.4 Digital Print

Digital prints below are performed by key operation.

- Manual print
- List print
- Engineering list print

[Reference]

Printing is actuated in following priority. See following Priority Order. When multiple types of printing are activated simultaneously, higher-priority printing takes effect first following the priority order. In alarm printing activation, lower category (Logging, DI Manual) also is activated. (See Fig. 6.2 that is example : Time printing of Alarm and Logging print are performed at the same time).

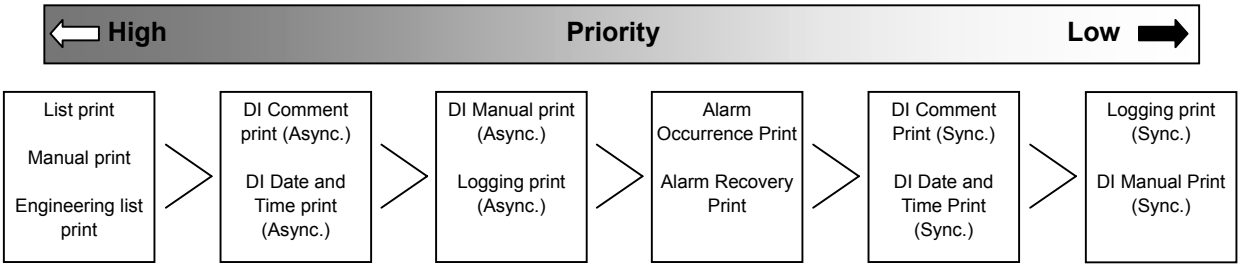

The Synchronous printout synchronizes with the analog recording and prints out digitally. In the case of asynchronous printout, it stops an analog recording and it executes a digital printout. It resumes an analog recording after the digital printout completes.

6.4.1 Manual Print

Prints the following data on the chart paper:

- Time/date (year, month, day)
- Channel number Tag setting character activated alarm type, latest process variable and engineering unit (all channels)

(1) Manual print operating procedure

① Press the “PRINT” key.

② Use the “PRINT” key to display “AAn”, and press the “ENT” key.

③ Use the “PRINT” key to select “StArt”. Pressing the “ENT” key executes manual print.

Once manual print starts, the display is automatically returned to the Data Display screen.

When manual print is terminated, it is returned to the status prior to starting manual print.

[Note]

① Analog recording is interrupted while manual print is running. However, measurement/alarm detection remains effective.

② If an alarm is activated while manual print is running, alarm print is performed when manual print is finished.

(2) Manual print stopping procedure

① Press the “PRINT” key.

② Use the “PRINT” key to display “MAn” , and press the “ENT” key.

③ Use the “PRINT” key to select “StoP” . Pressing the “ENT” key stops manual print.

However, print operation continues until the line is completed. Manual print is stopped.

And the display returned to the status prior to starting manual print.

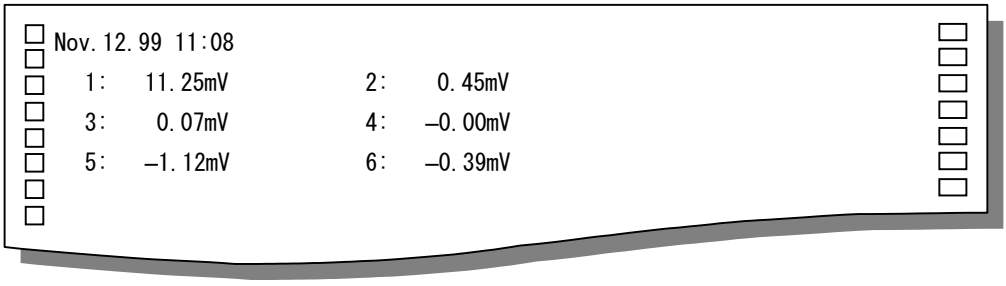

Fig. 6.3 Manual Print

6.4.2 List Print

Prints the following setting data of the instrument on the chart paper:

- Date/time/Chart feed speed/2nd chart feed speed/Printing cycle.
- Channel number/range/scaling value/engineering unit
- Setting alarm type

(1) List print operating procedure

① Press the “PRINT” key.

② Use the “PRINT” key to display “LI St”, and press the “ENT” key.

③ Use the “PRINT” key to select “StArt”. Pressing the “ENT” key executes list print.

Once list print starts, the display is automatically returned to the Data Display screen.

When the list print is terminated, it is returned to the status prior to starting list print.

[Note]

① Analog recording is interrupted while list print is running. However, measurement/alarm detection remains effective.

② If an alarm is activated while list print is running, alarm print is performed when recording restarts.

(2) List print stopping procedure

① Press the “PRINT” key.

② Use the “PRINT” key to display “LI St”, and press the “ENT” key.

③ Use the “PRINT” key to select “StoP” . Pressing the “ENT” key stops list print.

However, print operation continues until the line is completed. List print is stopped.

And the display returned to the status prior to starting list print.

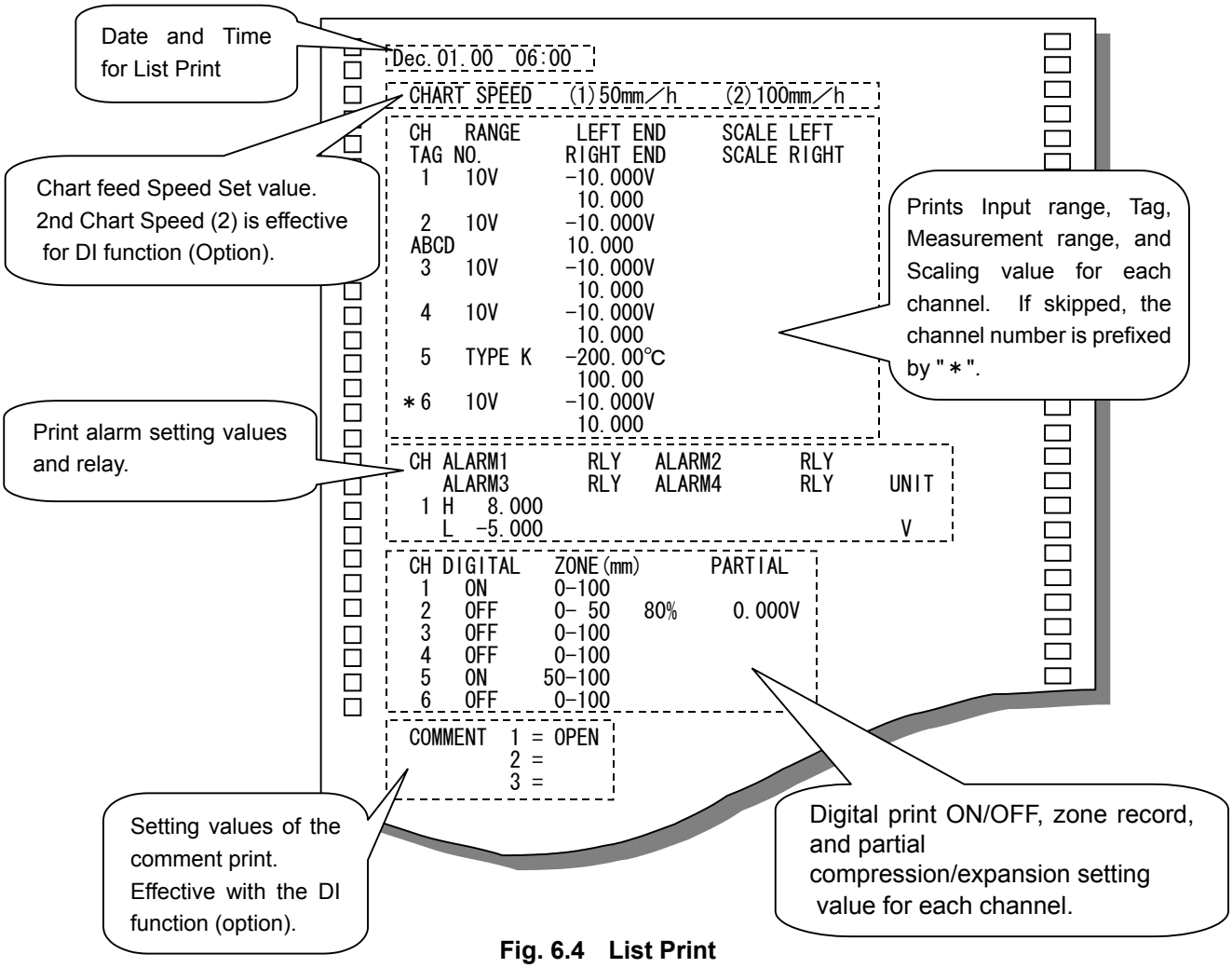

Fig. 6.4 List Print

6.4.3 Engineering List Print

Engineering list print provides the following setting data of the instrument on the chart paper.

- Analog recording
- Digital printing
- Burnout/RJC etc.

(1) Engineering list print operating procedure

① Press the “MENU” key.

② Use the “PRINT” key to display “ELI St”, and press the “ENT” key.

③ Use the “PRINT” key to select “StArt”. Pressing the “ENT” key executes engineering list print.

Once engineering list print starts, the display is automatically returned to the Data Display screen. When the engineering is terminated, it is returned to the status prior to starting engineering list print.

[Note]

① Analog recording is interrupted while engineering list print is running.
However, measurement/alarm detection remains effective.

② If an alarm is activated while engineering list print is running, alarm print is performed when recording restarts.

(2) Engineering list print stopping procedure

① Press the “MENU” key.

② Use the “PRINT” key to display “ELI St”, and press the “ENT” key.

③ Use the “PRINT” key to select “StoP”. Pressing the “ENT” key stops engineering list print. However, print operation continues until the line is completed.

Engineering list print stopped. And the display returned to the status prior to starting engineering list print.

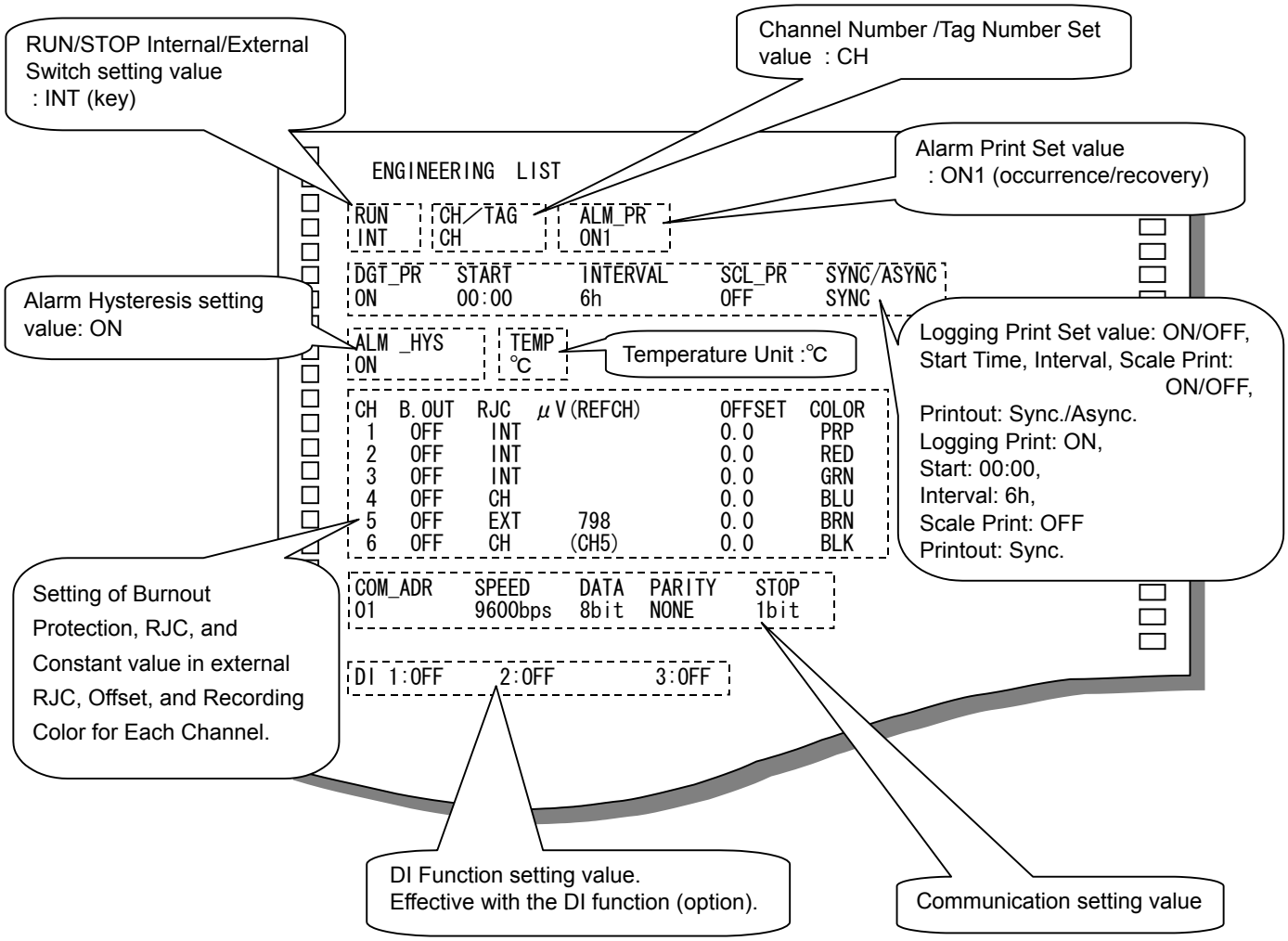

Fig. 6.5 Engineering List Print

6.5 Changing the Display

Display selection procedure

① Press the “MENU” key to display "dI SP", and press the “ENT” key.

② Use the “PRINT” key to select a required display screen from the menu below.
Press the “ENT” key.

③ "CH□" is displayd in the case of manual display. Use the “PRINT” key to select the channel number. Press the “ENT” key.

- “AUto”(AUTO) : Auto display
- “MAn”(MAN) : Manual display
- “dAtE”(DATE) : Date display
- “tI ME”(TIME) : Time display
- “oFF”(OFF) : Display off

6.5.1 AUto<Auto Display>

Displays the process variable of each channel sequentially at intervals of 2.5 seconds.

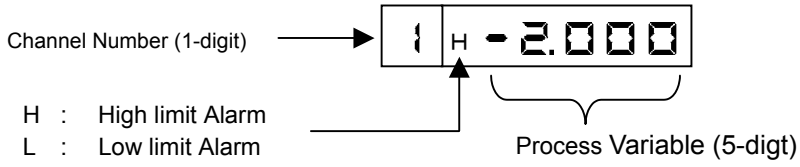

6.5.2 MAn<Manual Display>

Displays the process variable of the specific channel, it updates every measurement cycle.

The data is the same as Auto display. Pressing the “ENT” key changes the displayd channel number (it increments).

6.5.3 dAtE<Date Display>

Displays the month and day. Leap year adjustment is automatic.

Example of October 18

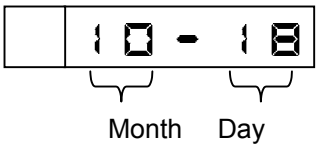

6.5.4 tI ME<Time Display>

Displays hour and minute.

Example of 12:15

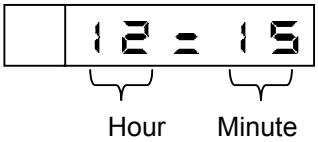

6.5.5 oFF<Display Off>

Turns off the process variable display. Key operation is the same as usual. To switch to other display, take steps ① through ③ mentioned above.

7. DEVICE SETTING

7.1 Setting the Setup Mode

⚠ WARNING

When calibrating data, connect the equipment written in the Section 9.5 of the instruction manual.
Data calibration must be performed correctly.
Therefore, operators possessing knowledge of electricity and control related matters should perform the calibration after careful reading of Sections 7.2 and 9.5 of the instruction manual.
(Shinko Technos is not liable for damages incurred if calibration is performed other than

Key Operation for Entering the Setup Mode

Press the "MENU" key for 3 seconds or more to enter the setup mode.
At the time, displays the version of the software approximately 1 second as below. After, displays the setting screen of the range.

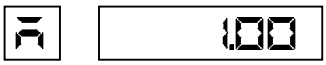

To return from the setup mode to the recording mode (user mode), press the "MENU" key for 3 seconds or more again.

The following describes how to set the following items.
The following shows a display map of the setup mode. Use the △key to operate.

- 7.1.1 Setting the Range

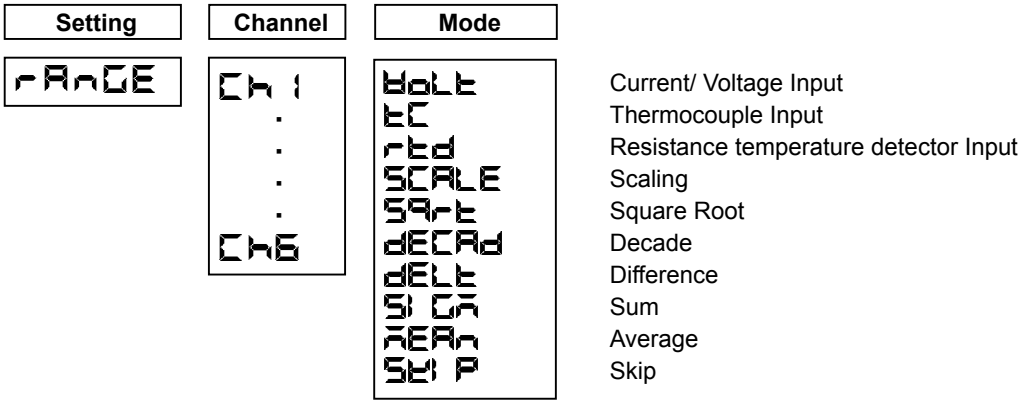

- 7.1.2 Setting the Alarm

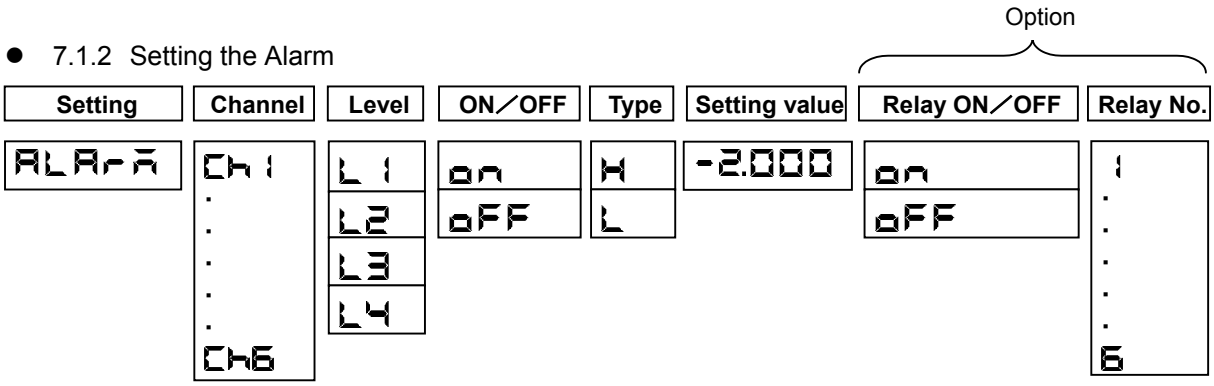

- 7.1.3 Setting the Unit

Setting	Channel	Char. No.	Code No.	
Unit	Ch1	1	Cd bF	(°)
	.	2	Cd 43	(C)
	.	3	Cd 00	End
	.	4		
	.	5		
	Ch6	6		

- 7.1.4 Setting the Chart feed Speed

Setting	1st/2nd Chart speed	Chart speed
CHAr	SPd-1	1500
	SPd-2	

- 7.1.5 Setting the Date and Time

Setting	Year	Month, Day	Time
CLoCK	y 2000	M01-01	t06:00

- 7.1.6 Copying the Setting Data

Setting	Copy-from Channel	Copy-to Channel
CoPy	F Ch1	t Ch2
	F Ch2	t Ch3
	.	.
	.	.
	.	.
	F Ch5	t Ch6

- 7.1.7 Setting the Other Functions (Printing Cycle, Zone Recording, Partial Compression/Expansion, Digital Print, Tag, Comment Words)

Setting	Mode	
AUX1	trEnd	Printing Cycle
	ZonE	Zone Recording
	PArt	Partial Compression/Expansion
	PrInt	Digital Print
	tAG	Tag
	CMnt	Comment Words

- Shift to the engineering mode

Setting	Password
EnG	P 0000

Input the password to enter the engineering mode.
See the key operation in page 67.

Table 7.1 Initial setting value of the setup mode

Setting items	Initial setting	Remarks
★Range (all channels)	±10mV Scaling 0 to 100.0 (℃)	
★Alarm (all channels)	All levels are alarm OFF, relay OFF	
★Engineering unit (all channels)	℃(BF 43 00)	
★Chart feed speed	(1) 20mm/h (2) 20mm/h	
★Time	2000/01/01, 00:00	Sets up the present time. (Japan standard time) GMT＋09:00
★Dot point interval	10 (s)	
★Zone setting (all channels)	0 to 100 (%)	
★Partial compression/expansion (all channels)	OFF	
★ Digital print (all channels)	ON	
★Tag print character (all channels)	“Blank up to the 7th character”	
★Comment print word (1 to 3)	“Blank up to the 16th character”	

7.1.1 Setting the Range

(1) Setting method

With a multirange system, setting the range for each channel is possible.

Use the △ key to shift the mode ① to ⑩ shown in the Table below.

Set the range from the following input signals. (mode ① to ③)

DC voltage	: ±10, 0 to 20, 0 to 50, ±200 mVdc, ±1, 0 to 5, ±10 Vdc
DC current	: 4 to 20 mAdc (External shunt resistor: 250 Ω)
Thermocouple	: B, R, S, K, E, J, T, C, Au-Fe, N, PR40-20, PL Ⅱ, U, L
Resistance temperature detector	: Pt100, JPt100

Sets scaling, decade, square root, interchannel sum/difference/average. (mode ④ to ⑨)

Unnecessary channels can be skipped. (mode ⑩)

Setting	Channel	Mode		Key
rAnGE	Ch 1 Ch 2 Ch 3 Ch 4 Ch 5 Ch 6 Setting for all channels	①	VoLt (Voltage, Current)	△key
		②	tC (Thermocouple)	↓
		③	rtd (Resistance temperature detector)	↓
		④	SCALE (Scaling)	↓
		⑤	SQrt (Square root)	↓
		⑥	dECAd (Decade)	↓
		⑦	dELt (Difference)	↓
		⑧	SUM (Sum)	↓
		⑨	AEAn (Average)	↓
		⑩	SKIP (Skip)	↓

[Note]

A decimal point arbitrary position can be set only in the "scaling" and "square root" modes. When you want to alter the decimal point position in Voltage/Current/Thermocouple/Resistance temperature detector input set it in the "scaling" mode. To fix the decimal point position, set it as follows.

Input	Decimal Places		Input	Decimal Places	
mV	2nd place	＊＊＊. OO	Thermocouple	1st place	＊＊＊＊. O
±1, 0 to 5V	3rd place	＊＊. OOO	RTD	1st place	＊＊＊＊. O
±10V	2nd place	＊＊＊. OO	±200mVdc	1st place	＊＊＊＊. O
mA	2nd place	＊＊＊. OO			

(2) VoLt (Current/Voltage), tC (Thermocouple), rtd (Resistance Temperature Detector)

Measures Current, Voltage, Thermocouple and RTD.

Example) When setting Thermocouple T for Channel 1(T :-100 to 300 ℃)

Display	Operation keys	Description
rAnGE	ESC MENU 3sec / ENT	Press the "MENU" key for 3 seconds or more to enter the setup mode. Displays "rAnGE", then, press the "ENT" key.
Ch 1	△ PRINT / ENT	Use the△ key to select the channel you want to set. Press the "ENT" key.
tC	△ PRINT / ENT	Use the △ key to select the mode. Press the "ENT" key.
t	△ PRINT / ENT	Use the △ key to select the type. Press the "ENT" key.
L - 100.0 (Zero setting)	△ PRINT / ▷ FEED / ENT	Use the △ key to select a sign and numeral. Use the ▷ key to shift a digit. Press the "ENT" key.
r 300.0 (Span setting)	△ PRINT / ▷ FEED / ENT	Use the △ key to select a sign and numeral. Use the ▷ key to shift a digit. Press the "ENT" key.
-SEt-	ENT	Press the "ENT" key. Setting is completed. To return to the user mode, press the "MENU" key for 3 seconds or more.

[Note]

① When an incorrect numeral is input displays an error, E Err21 or E Err24. Press the "ENT" key and re-enter a correct numeral.

② For the range setting (When especially, don't change a decimal point position at the thermocouple or in RTD) which doesn't have the necessity of the scaling, don't set a scaling.

[Note]

In the volt, tC, or rtd mode, press the "ENT" key to select the range.
Use the △ key, you can select the type.

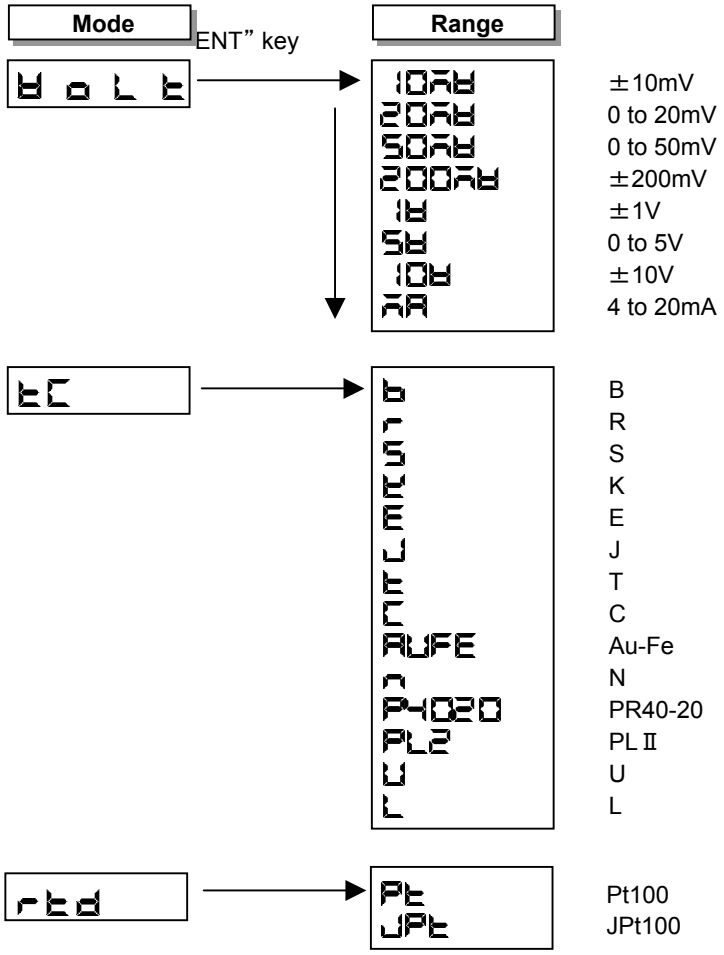

(3) SCALE (Scaling)

Changes the input of VOLT, TC and RTD into a quantity.

Setting the unit is possible.(See 7.1.3 on page 56)

Example) When setting the voltage of 0 to 40 mV and scale of 000.00 to 100.00 for Channel 1.

Display	Operation keys	Description
rAnGE	ESC MENU 3sec △ PRINT ENT	Press the "MENU" key for 3 seconds or more to enter the setup mode. Use the △ key to display "rAnGE". Press the "ENT" key.
Ch 1	△ PRINT ENT	Use the △ key to select the channel you want to set. Press the "ENT" key.
SCALE	△ PRINT ENT	Use the △ key to select "SCALE". Press the "ENT" key.
VoLt	△ PRINT ENT	Use the △ key to select "VoLt". Press the "ENT" key. If tC or rCd is selected here, temperature input scaling is possible.
50mV	△ PRINT ENT	Use the △ key to select a range(50 mV). Press the "ENT" key.
L 000.00 (Zero input value)	△ PRINT ▷ FEED ENT	Use the △ key to select a numeral. Use the ▷ key to shift a digit. Press the "ENT" key.

[Note]

In the case of TC and RTD input, set the Zero input value equal to the Zero-side scale value.

But, set a decimal point position to the standard position. (∗ 1:next page)

r 040.00 (Span input value)	△ PRINT ▷ FEED ENT	Use the △ key to select a numeral. Use the ▷ key to shift a digit. Press the "ENT" key.

[Note]

In the case input, set the Span input value equal to the Span-side scale value.

But, set a decimal point position to the standard position. (∗ 2:next page)

L 0000.0

(Zero-side scale value) (∗1)

PRINT FEED

Use the △ key to select a numeral.
Use the ▷ key to shift a digit.

L 000.00

(Decimal point)

FEED PRINT

ENT

Press the ▷ key again in the lowest digit(right end) to blink a decimal point. Use the △ key to select a decimal point position. Press the "ENT" key.

r 100.00

(Span-side scale value) (∗

PRINT FEED

ENT

Use the △ key to select a numeral.
Use the ▷ key to shift a digit. Press the "ENT" key.

-SEt-

ENT

Press the "ENT" key. Setting is completed.
To return to the user mode, press the "MENU" key for 3 seconds or more.

[Note]

When an incorrect numeral is input, the display indicates error E Err21 , E Err24 or E Err25 .

Press the "ENT" key and re-enter a correct numeral.

(4) SqrE (Square Root)

Caluclates the square root of Volt input, and scaling that value.

Setting the unit is possible. (See 7.1.3 on page 56)

Example) When setting the voltage of 0 to 40 mV and scale of 000.00 to 100.00 for Channel 1.

Display	Operation keys	Description
rAnGE	ESC MENU 3sec / △ PRINT ENT	Press the "MENU" key for 3 seconds or more to enter the setup mode. Use the △ key to display "rAnGE". Press the "ENT" key.
Ch 1	△ PRINT ENT	Use the △ key to select the channel you want to set. Press the "ENT" key.
SqrE	△ PRINT ENT	Use the △ key to select "SqrE". Press the "ENT" key.
50Mv	△ PRINT ENT	Use the △ key to select a range(50 mV). Press the "ENT" key.
L 000.00 (Zero input value)	△ PRINT ▷ FEED ENT	Use the △ key to select a numeral. Use the ▷ key to shift a digit. Press the "ENT" key.
r 040.00 (Span input value)	△ PRINT ▷ FEED ENT	Use the △ key to select a numeral. Use the ▷ key to shift a digit. Press the "ENT" key.
L 0000.0 (Zero-side scale value)	△ PRINT ▷ FEED	Use the △ key to select a numeral. Use the ▷ key to shift a digit.
L 000.00 (Decimal point)	▷ FEED △ PRINT ENT	Press the ▷ key again in the lowest digit(right end) to blink a decimal point. Use the △ key to select a decimal point position. Press the "ENT" key.
r 100.00 (Span-side scale value)	△ PRINT ▷ FEED ENT	Use the △ key to select a numeral. Use the ▷ key to shift a digit. Press the "ENT" key.
-SEt-	ENT	Press the "ENT" key. Setting is completed. To return to the user mode, press the "MENU" key for 3 seconds or more.

[Note]

When an incorrect numeral is input, E Err21 , E Err24 or E Err25 is displayed.

Press the "ENT" key and re-enter a correct numeral.

About Square Root Computation

The square root computation is as follows:

- Each item is defined as follows:

  $SPAN_L$: Span lower-limit value (Span L)

  $SPAN_R$: Span upper-limit value (Span R)

  $SCAL_L$: Scaling lower-limit value (Scale L)

  $SCAL_R$: Scaling upper-limit value (Scale R)

  IN : Input voltage

  OUT : Output (Scaling value)

- When an input value is 1 % or more (1 to 100 %)

$$OUT = (SCAL_R - SCAL_L) \times \sqrt{\frac{IN - SPAN_L}{SPAN_R - SPAN_L}} + SCAL_L$$

- When an input value is less than 1 %

$$OUT = \frac{10 \times (SCAL_R - SCAL_L)}{SPAN_R - SPAN_L} \times (IN - SPAN_L) + SCAL_L$$

Example) When setting as in the previous page, the display is as following table.

Input voltage (mV)	0	10	20	30	40
Display (%)	0. 00	50. 00	70. 71	86. 63	100. 00

[Note]

The relation between scaling factor and displaying digit may stagger the accuracy rating.

(5) dECAd (Decade)

Scaling the VOLT input and displays the index number. Setting the unit is possible. (See 7.1.3 on page 56)

Example) When setting the voltage of 0 to 5 V and decade of 1.0×10^0 to 1.0×10^5 for Channel 1.

Display	Operation keys	Description
rAnGE	ESC MENU 3sec △ PRINT ENT	Press the "MENU" key for 3 seconds or more to enter the setup mode. Use the △ key to display "rAnGE". Press the "ENT" key.
Ch 1	△ PRINT ENT	Use the △ key to select the channel you want to set. Press the "ENT" key.
dECAd	△ PRINT ENT	Use the △ key to select "dECAd". Press the "ENT" key.
5V	△ PRINT ENT	Use the △ key to select a range(5V). Press the "ENT" key.
L 00.000 (Zero input value)	△ PRINT ▷ FEED ENT	Use the △ key to select a numeral. Use the ▷ key to shift a digit. Press the "ENT" key.
r 05.000 (Span input value)	△ PRINT ▷ FEED ENT	Use the △ key to select a numeral. Use the ▷ key to shift a digit. Press the "ENT" key.
L 1.0E00 (Zero-side scale value)	△ PRINT ▷ FEED ENT	Use the △ key to select a numeral. Use the ▷ key to shift a digit. Press the "ENT" key.
r 1.0E05 (Span-side scale value)	△ PRINT ▷ FEED ENT	Use the △ key to select a numeral. Use the ▷ key to shift a digit. Press the "ENT" key.
-SEt-	ENT	Press the "ENT" key. Setting is completed. To return to the user mode, press the "MENU" key for 3 seconds or more.

[Note]

When an incorrect numeral is input E Err21 , E Err24 or E Err25 is displayed.

Press the "ENT" key and re-enter a correct numeral.

About Decade Display

- Each item is defined as follows:

$SPAN_L$	: Span low limit value (Span L)	
$SPAN_R$	: Span high limit value (Span R)	
$SCAL_L$	: Scaling low limit value (Scale L)	XXEYY
$SCAL_R$	: Scaling high limit value (Scale R)	XXEYY
IN	: Input voltage	
OUT	: Output (Scaling value)	

XX: Mantissa section (1.0 to 9.9)
YY: Exponent section (-19 to 19)
Up to 5 decades.
(Scaling upper limit)−(Scaling lower limit) is 1.0E5 or less.

- Decade display abides by the following relational expression.

$$OUT1 = IN \times \frac{LG\ SCAL_R - LG\ SCAL_L}{SPAN_R - SPAN_L} + \frac{SPAN_R \times LGSCAL_L - SPAN_L \times LGSCAL_R}{SPAN_R - SPAN_L}$$

$$OUT = 10^{OUT1}$$

$LG\ SCAL_L$: $Log_{10}(SCAL_L)$

$LG\ SCAL_R$: $Log_{10}(SCAL_R)$

[Note]

Decade output is used for display and print. It is not reflected on a printing position.

Example) When setting as in the previous page, the display is as following table.

Input voltage (V)	0. 0	1. 0	2. 5	3. 0	5. 0
Display	1. 0E0	1. 0E1	3. 2E2	1. 0E3	1. 0E5

(6) dELt (Difference), SUM (Sum), AVEr (Average)

Caluclates the input of VOLT, TC, RTD or SCALE, and output.

Example) When subtracting the Ch 1 input data from the Ch 6 input data to set the difference (0 to 40 mV). Records and displays on Ch 6 “Ch 6 (input) - Ch 1(input)”.

Display	Operation keys	Description
rAnGE	ESC MENU 3sec / △ PRINT ENT	Press the “MENU” key for 3 seconds or more to enter the setup mode. Use the △ key to display "rAnGE". Press the “ENT” key.
Ch6 (Setting channel)	△ PRINT ENT	Use the △ key to select the channel you want to set. Press the “ENT” key.
dELt	△ PRINT ENT	Use the △ key to select "dELt". Press the “ENT” key.
Ch 1 (Reference channel)	△ PRINT ENT	Use the △ key to select the "channel you want to subtract." Press the “ENT” key.
L 000.00 (Zero input value after difference operation)	△ PRINT ▷ FEED / ENT	Use the △ key to select a numeral. Use the ▷ key to shift a digit. Press the “ENT” key.
r 040.00 (Span input value after difference operation)	△ PRINT ▷ FEED / ENT	Use the △ key to select a numeral. Use the ▷ key to shift a digit. Press the “ENT” key.
-SEt-	ENT	Press the “ENT” key. Setting is completed. To return to the user mode, press the “MENU” key for 3 seconds or more.

[Note]

When an incorrect numeral is input E Err21, E Err24 or E Err25 is displayed.

Press the “ENT” key and re-enter a correct numeral.

About Difference, Sum, and Average

- The setting channel must be larger than the one on which computes the "difference, sum, or average". When setting Channel 6, for example, you can subtract the Channel 1 to 5 value.
- The range and scale of the setting channel is the same as the channel on which computes the "difference, sum, and average".
- A range value after the computation cannot exceed the maximum range of the instrument.
- Set for the reference channel only the voltage, current, thermocouple, resistance temperature detector, and their scaling ranges.

(7) SKI P(Skip)

Setting SKIP on the Channel that does not display and record.

Example) When skipping Channel 6.

Display	Operation keys	Description
rAnGE	ESC MENU 3sec △ PRINT ENT	Press the “MENU” key for 3 seconds or more to enter the setup mode. Use the △ key to display "rAnGE". Press the “ENT” key.
CH6	△ PRINT ENT	Use the △ key to select the channel you want to set. Press the “ENT” key.
SKI P	△ PRINT ENT	Use the △ key to select "SKI P". Press the “ENT” key.
-SEt-	ENT	Press the “ENT” key. Setting is completed. To return to the user mode, press the “MENU” key for 3 seconds or more.

[Note]

Setting all the channels to Skip displays an error, E Err28 .

At least, one channel should be set to measurement.

About Skip

- The skip channel measures, but does not display, print, nor assess alarms. If input is not connected, short-circuit a measurement terminal.

7.1.2 Setting the Alarm

Setting items

Alarm setting to the following 2 types for each channel is possible.

Alarm point can be set up to 4 levels per channel.

Once alarm point is set up “ALM” when a process variable reaches alarm point, and simultaneously, outputs the alarm print indicating an alarm occurrence to the chart paper.

H: High limit alarm ---- When the process variable is higher than the alarm setting point, issues an alarm.

L: Low limit alarm ---- When the process variable is lower than the alarm setting point, issues an alarm.

Operation

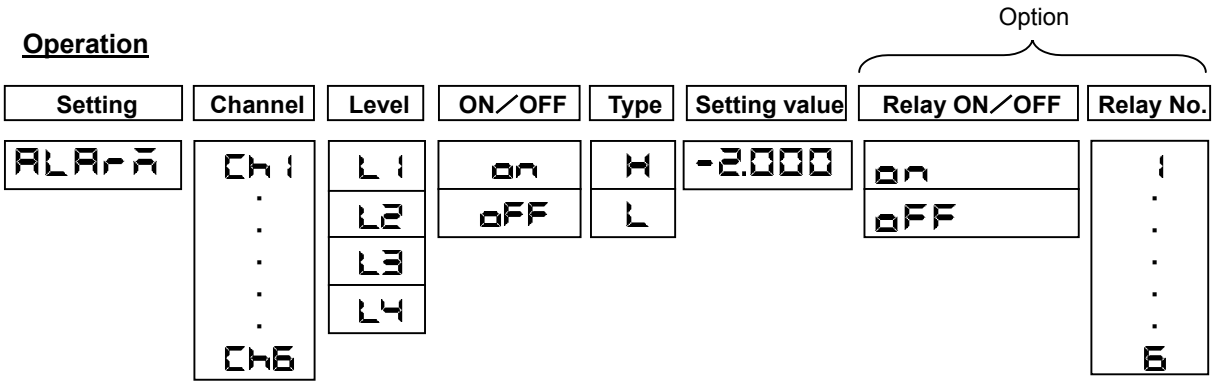

Example) When setting for the Channel 1 alarm point (Level 1) the high limit alarm, set the value of -2.000, and alarm output relay No. 1.

Display		Operation keys	Description
	ALArA	ESC MENU 3sec △ PRINT ENT	Press the “MENU” key for 3 seconds or more to enter the setup mode. Use the △ key to display "ALArA". Press the “ENT” key.
	Ch1	△ PRINT ENT	Use the △ key to select the channel you want to set. Press the “ENT” key.
1	L1	△ PRINT ENT	Use the △ key to select an alarm level. Press the “ENT” key. Up to 4 levels can be set.
1	on	△ PRINT ENT	Use the △ key to select alarm setting ON. Press the “ENT” key. Setting "oFF" displays "ALArA" and completes setting.
1	H	△ PRINT ENT	Use the △ key to select an alarm type. Press the “ENT” key.
1	-2.000	△ PRINT ▷ FEED ENT	Set an alarm point. Use the ▷ key to shift a digit, and use the △ key to select a numeral. Once setting is completed, press the “ENT” key. A decimal point position is fixed depending on the range.

[Note]

When the “ENT” key is pressed during alarm point setting. Display will be switched to the next setting display

Setting hereinafter is valid only for the model to which an alarm output (option : LH6) has been attached. If the option has not been set, press the “ENT” key until "-SEt-" is displayd.
Then, press the “ENT” key once more. Setting is completed.

Display		Operation keys	Description
1	on	△ PRINT ENT	When an alarm occurs, issues the alarm output from the alarm output relay. Use the △ key to select alarm output ON and press the “ENT” key. If the alarm output is not used, select OFF and press the “ENT” key.
1	1	△ PRINT ENT	If the alarm output is set to ON, set the relay number. Use the △ key to select the relay number out of 1 to 6, and press the “ENT” key.
	-SEt-	ENT	Press the “ENT” key. Setting is completed. When you want to continue to set for other channel, press the △ key to select the channel, and start setting. To return to the user mode, press the “MENU” key for 3 seconds or more.

[Note]

The tag setting does not effect on Alarm print setting. Prints channel numbers every time.

7.1.3 Setting the Unit

Setting Items

Sets the unit for each channel.

> **[Note]**
> If you change the unit in the range of Volt, tC or rtd, set the range to SCALE.

Operation

Setting	Channel	Char. No.	Code No.	
Unit	Ch1	1	Cd bF	(°)
	.	2	Cd 43	(C)
	.	3	Cd 00	End
	.	4		
	.	5		
	Ch6	6		

Example) Setting the unit(℃) for Channel 1.

	Display	Operation keys	Description
	Unit	ESC MENU 3sec / △ PRINT / ENT	Press the "MENU" key for 3 seconds or more to enter the setup mode. Use the △ key to display "Unit". Then, press the "ENT" key.
	Ch1	△ PRINT / ENT	Use the △ key to select the channel you want to set. Then, press the "ENT" key.
1	Cd bF (Code No.)	△ PRINT / ▷ FEED / ENT	Use the △ or ▷ key to select the 1st character of the code number, and press the "ENT" key. See Characters Code Table on the next page.
2	Cd 43	△ PRINT / ▷ FEED / ENT	Set the 2nd character in the same manner.
3	Cd 00	△ PRINT / ▷ FEED / ENT	When the number of unit characters is less than 6, enter a code(00) to end. Press the "ENT" key.
	-SEt-	ENT	Press the "ENT" key. Setting is completed. To return to the user mode, press the "MENU" key for 3 seconds or more.

> **[Note]**
> The unit setting is effective only when the range setting is SCALE, SQrt or dECAd (including dELt, SI GA and AEAn when SCALE is selected as the reference channel.
> When the range setting is others, the unit is determined according to the range automatically.

(1) Character code table

	2＊	3＊	4＊	5＊	6＊	7＊	A＊	B＊	C＊	D＊	E＊	F＊
＊0	SP	0	@	P		p	$_0$	^{0}		Π		π
＊1	!	1	A	Q	a	q	$_1$	^{1}	Α	Ρ	α	ρ
＊2	″	2	B	R	b	r	$_2$	^{2}	Β	Σ	β	σ
＊3	#	3	C	S	c	s	$_3$	^{3}	Γ	Τ	γ	τ
＊4	$	4	D	T	d	t	$_4$	^{4}	Δ	Υ	δ	υ
＊5	%	5	E	U	e	u	$_5$	^{5}	Ε	Φ	ε	φ
＊6	&	6	F	V	f	v	$_6$	^{6}	Ζ	Χ	ζ	χ
＊7	′	7	G	W	g	w	$_7$	^{7}	Η	Ψ	η	ψ
＊8	(	8	H	X	h	x	$_8$	^{8}	Θ	Ω	θ	ω
＊9	)	9	I	Y	i	y	$_9$	^{9}	Ι		ι	
＊A	＊	:	J	Z	j	z			Κ		κ	
＊B	＋	;	K	[	k	{	$_+$	$^+$	Λ		λ	
＊C	,	＜	L	¥	l	|	±	∓	Μ	◿	μ	
＊D	－	＝	M	]	m	}			Ν	◢	ν	
＊E	.	＞	N	^	n	‾	_	⁻	Ξ	◺	ξ	
＊F	／	?	O	＿	o		°	°	Ο	◣	ο	

Setting example) The code number for "C" is "43".

7.1.4 Setting the Chart feed speed

Setting Items

Sets the chart feed speed. Select it from the table below.

Table 7.2 Chart Speed (Unit: mm/h)

0	1	2	3	4	5	10	15	20	25
30	40	50	60	75	80	90	100	120	150
160	180	200	240	300	360	375	450	600	720
750	900	1200	1500						

Operation

Setting	1st/2nd Chart feed speed	Chart feed speed
CHArt	SPd-1	1500
	SPd-2	

Example) When setting the 1st chart feed speed to 1500 mm/h.

Display	Operation keys	Description
CHArt	ESC MENU 3sec △ PRINT ENT	Press the "MENU" key for 3 seconds or more to enter the setup mode. Use the △ key to display "CHArt", and press the "ENT" key.
SPd-1	△ PRINT ENT	Use the △ key to select the 1st chart feed speed, and press the "ENT" key.

[Note]
When altering the chart feed speed with the DI function (option : RE6), set the 2nd chart feed speed.
If the DI function (option : RE6) is not attached, setting of the 2nd chart feed speed becomes invalid.

Display	Operation keys	Description
1500	△ PRINT ▷ FEED	Use the △ key to set the 1st chart feed speed, and press the "ENT" key.
-SEt-	ENT	Press the "ENT" key. To return to the user mode, press the "MENU" key for 3 seconds or more.

[Note]

Restriction of printing by chart feed speed

Print type	Chart speed(mm/h)
Alarm occurrence print, Alarm recovery print, Affix print, DI Comment print (Synchronous), DI Date and Time print (Synchronous), DI Manual print (Synchronous)	1 to 100
Logging print (Synchronous)	10 to 100

When the chart speed is 0 mm/h, it's printed with forcible chart feed. (When the chart feed speed is more than 120 mm/h, the table shown above is not printed.) List Print, Engineering List Print , Manual Print (key), DI Comment print (Asynchronous) , DI Date and Time print (Asynchronous) , DI Manual print (Asynchronous) and Logging print (Asynchronous) is printed regardless of the chart feed speed.

7.1.5 Setting the Date and Time

Operation

The following figure describes how to set the date/time of the internal clock.

Setting	Year	Month, Day	Time
CLoCK	y 2000	M 01-01	t 06:00

Example) When setting the date and time to January 1st, 2000, 6:00.

Display		Operation keys	Description
	CLoCK	ESC MENU 3sec △ PRINT ENT	Press the "MENU" key for 3 seconds or more to enter the setup mode. Use the △ key to display "CLoCK," and press the "ENT" key.
y	2000	△ PRINT ▷ FEED ENT	Set the year. Use the △ key to select a numeral, and use the ▷ key to shift a digit. Press the "ENT" key.
M	01-01	△ PRINT ▷ FEED ENT	Set the month and day. Operate in the same manner as setting the year.
t	06:00	△ PRINT ▷ FEED ENT	Set the time (hours and minutes). Operate in the same manner as setting the year.
	-SEt-	ENT	Press the "ENT" key. To return to the user mode, press the "MENU" key for 3 seconds or more.

[Note]

If you enter a non-existent date or time, an error E Err28 is displayed.

Press the "ENT" key and re-enter a correct numeral.

7.1.6 Copying the Setting Data

Setting Items

The following figure describes how to copy the setting data of any channel to the other channel. The number of the original channel must be bigger than the channel to be copied.

Operation

Setting	Original channel	Channel to be copied
CoPy	F Ch1	t Ch2
	F Ch2	t Ch3
	⋮	⋮
	F Ch5	t Ch6

Example) When copying the setting data of Channel 1 to Channel 2.

Display	Operation keys	Description
CoPy	ESC MENU 3sec △ PRINT ENT	Press the “MENU” key for 3 seconds or more to enter the setup mode. Use the △ key to display "CoPy", and press the “ENT” key.
F Ch1	△ PRINT ENT	Use the △ key to select the original channel, and press the “ENT” key.
t Ch2	△ PRINT ENT	Use the △ key to select the channel to be copied, and press the “ENT” key.
-SEt-	ENT	Press the “ENT” key. To return to the user mode, press the “MENU” key for 3 seconds or more.

7.1.7 Setting the other functions

Setting the other functions as follows is possible.

Setting Items

① trEnd (Printing cycle)

Selects a printing cycle from 10, 20, 30, and 60 seconds.

② ZonE (Zone recording)

The data for each channel can be recorded separately in another area so as not to overlap.

③ PArt (Partial compression/expansion)

Records the measured data of the channel, partially compressed or expanded.

④ Pri nt (Digital print)

Specify ON or OFF whether the measured data for each channel is to be printed or not.

⑤ tAG (Tag)

Sets the tag, which is to be printed instead of a channel number, for logging print or manual print. Setting the tag up to 7 characters (select from character code table on page 57), for each channel is possible.

⑥ CAnt (Comment words)

Sets the comment words to be printed by DI function (Option : RE6).

There are 3 kinds of comment words and setting up to 16 characters (select from character code table on page 57) for each DI is possible.

Operation

Setting	Mode	
AUt	trEnd	Printing Cycle
	ZonE	Zone Recording
	PArt	Partial Compression/Expansion
	Pri nt	Digital Print
	tAG	Tag
	CAnt	Comment Words

(1) trEnd (Printing Cycle)

Example) Setting the printing cycle to 60 seconds.

Display	Operation keys	Description
AU1	ESC MENU 3sec △ PRINT ENT	Press the "MENU" key for 3 seconds or more to enter the setup mode. Use the △ key to display "AU1", and press the "ENT" key.
trEnd	△ PRINT ENT	Use the △ key to display "trEnd", and press the "ENT" key.
60	△ PRINT ENT	Use the △ key to select the printing cycle "60", and press the "ENT" key.
-SEt-	ENT	Press the "ENT" key. Setting is completed. To return to the user mode, press the "MENU" key for 3 seconds or more.

(2) ZonE (Zone Recording)

Example) Setting the instrument so that Channel 1 zero/span will be recorded at the position of 20 to 50 %.

Display	Operation keys	Description
AU1	ESC MENU 3sec △ PRINT ENT	Press the "MENU" key for 3 seconds or more to enter the setup mode. Use the △ key to display "AU1", and press the "ENT" key.
ZonE	△ PRINT ENT	Use the △ key to display "ZonE", and press the "ENT" key.
Ch1	△ PRINT ENT	Use the △ key to select the channel you want to set, and press the "ENT" key.
L 020 (Setting of Left-end Position)	△ PRINT ▷ FEED ENT	Set a zero point printing position in percentage (%). Use the △ key to select a numeral, and use the ▷ key to shift a digit. Press the "ENT" key.
r 050 (Setting of Right-end Position)	△ PRINT ▷ FEED ENT	Set a span printing position in percentage (%). Operate in the same manner as setting the zero point printing position.
-SEt-	ENT	Press the "ENT" key. Setting is completed. To return to the user mode, hold down the "MENU" key for 3 seconds or more.

[Note]

If you enter an incorrect numeral, errors E Err21 or E Err26 is displayed.
Press the "ENT" key and re-enter a correct numeral.

(3) PArt (Partial Compression/Expansion)

Example) Setting Channel 1 scale of 0 to 1,000.0 ℃ to 500.0 ℃ at a boundary point of 30 %.

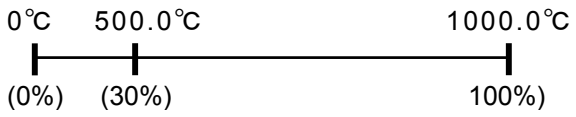

Display	Operation keys	Description
AU1	ESC MENU 3sec / △ PRINT ENT	Press the "MENU" key for 3 seconds or more to enter the setup mode. Use the △ key to display "AU1", and press the "ENT" key.
PArt	△ PRINT ENT	Use the △ key to select "PArt", and press the "ENT" key.
Ch1	△ PRINT ENT	Use the △ key to select the channel you want to set, and press the "ENT" key.
on	△ PRINT ENT	Use the △ key to select "on", and press the "ENT" key.
030	△ PRINT ▷ FEED / ENT	Set a boundary point position in percentage (%). Use the △ key to select a numeral, and use the ▷ key to shift a digit. Press the "ENT" key.
0500.0	△ PRINT ▷ FEED / ENT	Set a boundary point position to "0500.0". Use the △ key to select a numeral, and use the ▷ key to shift a digit. Press the "ENT" key.
-SEt-	ENT	Press the "ENT" key. Setting is completed. To return to the user mode, press the "MENU" key for 3 seconds or more.

[Note]

If you enter an incorrect numeral, an error E Err21 is displayed.
Press the "ENT" key and re-enter a correct numeral.

(4) Pr1 nt (Digital Print)

Example) Setting logging channel data print to "ON"(print enabled) for all the channels.

Display	Operation keys	Description
AU1	ESC MENU 3sec △ PRINT ENT	Press the "MENU" key for 3 seconds or more to enter the setup mode. Use the △ key to display "AU1", and press the "ENT" key.
Pr1 nt	△ PRINT ENT	Use the △ key to display "Pr1 nt", and press the "ENT" key.
Ch1	△ PRINT ENT	Use the △ key to select the channel you want to set, and press the "ENT" key.
on	△ PRINT ENT	Use the △ key to switch from "oFF" to "on", and press the "ENT" key.
-SEt-	ENT	Press the "ENT" key. Setting is completed. To return to the user mode, press the "MENU" key for 3 seconds or more.
Ch2	△ PRINT ENT	Repeat setting for each channel.
⋮		
Ch6	△ PRINT ENT	
-SEt-	ENT	

[Note]

When the channel which selected skip in the range setting is set ON, "＊" is printed.

(5) tAG (Tag)

Example) Setting "ABCD" for Channel 1.

Display	Operation keys	Description
AUt 1	ESC MENU 3sec △ PRINT ENT	Press the "MENU" key for 3 seconds or more to enter the setup mode. Use the △ key to display "AUt 1", and press the "ENT" key.
tAG	△ PRINT ENT	Use the △ key to display "tAG", and press the "ENT" key.
Ch 1	△ PRINT ENT	Use the △ key to select the channel you want to set, and press the "ENT" key.
1 Cd 41 (Setting of 1st Character)	△ PRINT ▷ FEED ENT	Set "4 1" as the 1st character. Use the △ key to select a code, and use the ▷ key to shift a digit. Press the "ENT" key.
2 Cd 42 (Setting of 2nd Character)	△ PRINT ▷ FEED ENT	Set the 2nd to the 4th characters in the same manner.
3 Cd 43 (Setting of 3rd Character)	△ PRINT ▷ FEED ENT	
4 Cd 44 (Setting of 4th Character)	△ PRINT ▷ FEED ENT	
5 Cd 00 (Setting of 5th Character)	△ PRINT ▷ FEED ENT	Set "00" as the 5th character and press the "ENT" key.
-SEt-	ENT	Press the "ENT" key. Setting is completed. To return to the user mode, press the "MENU" key for 3 seconds or more.

[Note]

When the number of tag characters is less than 7, set the "00" code following the last character.

See page 57 for Character code table.

(6) Cmnt (Comment Words)

Example) Setting "ON" for Comment 1(Cmt 1).

Display	Operation keys	Description
AU1	ESC MENU 3sec △ PRINT ENT	Press the "MENU" key for 3 seconds or more to enter the setup mode. Use the △ key to display "AU1", and press the "ENT" key.
Cmnt	△ PRINT ENT	Use the △ key to display "Cmnt", and press the "ENT" key.
Cmt 1	△ PRINT ENT	Use the △ key to select a comment number. Display "Cmt 1" and press the "ENT" key.
1 Cd 4F (Setting of 1st Character)	△ PRINT ▷ FEED ENT	Set "4F" as the 1st character. Use the △ key to select a code, and use the ▷ key to shift a digit. Press the "ENT" key.
2 Cd 4E (Setting of 2nd Character)	△ PRINT ▷ FEED ENT	Set "4E" as the 2nd character. Operate in the same manner as setting the 1st character.
3 Cd 00 (Setting of 3rd Character)	△ PRINT ▷ FEED ENT	Set "00" as the 3rd character. Operate in the same manner as setting the 1st character.
9 (Setting of 9th Character) 0. (Setting of 10th Character) 1. (Setting of 11th Character) 6. (Setting of 16th Character)		Repeat setting for each channel.
-SEt-	ENT	Press the "ENT" key. Setting is completed. To return to the user mode, press the "MENU" key for 3 seconds or more.

[Note]

- When the number of tag characters is less than 16, set the "00" code following the last character. See page 57 for Character code table.
- When DI (option: RE6) is not designated, comment print does not function.
  Do not set the comment setting.

7.2 Setting the Engineering Mode to use this more smoothly.

⚠ WARNING

When calibrating data, connect the equipment written in the Section 9.5 of the instruction manual.
Data calibration must be performed correctly.
Operators possessing knowledge of electricity and control related matters should perform the calibration after careful reading the Sections 7.2 and 9.5 of the instruction manual.
(Shinko Technos is not liable for any damages incurred if calibration is performed other than described in the instruction manual.)

Key Operation to Enter the Engineering Mode

Press the "MENU" key for 3 seconds or more to enter the setup mode.
Use the △ key to select "EnG", and press the "ENT" key then to display "0000".
Use the △ key to alter a numeral, and the ▷ key to shift a digit, enter the password "2222".
Press the "ENT" key then to display blinking "rESEt".
Press the "ENT" key. After reset, it enters the engineering mode.

The following figure describes how to set the following items.
The following figure shows a display map of the Enginneering mode. Use the △key to operate.

- 7.2.1 Alarm Hysteresis

Setting	ON/OFF	
ALAHS	on oFF	Sets the hysteresis width Cancels the hysteresis width

- 7.2.2 Burnout ON/OFF

Setting	Channel	ON/OFF	
b.out	Ch1 Ch2 Ch3 Ch4 Ch5 Ch6	on oFF	Sets burnout Cancels burnout

- 7.2.3 Channel Offset

Setting	Channel	OFFSET	
oFSEt	Ch1 Ch2 Ch3 Ch4 Ch5 Ch6	0.0000	Enter an offset value

- 7.2.4 Reference Junction Compensation

Setting	Channel	Function	
rJC	Ch1 Ch2 Ch3 Ch4 Ch5 Ch6	Int Ext Ch	Internal Compensation External Compensation External Channel Input Compensation

- 7.2.5 Changing the Printing Color

Setting	Channel	COLOR	
Color	Ch1	PrP	Purple
	Ch2	rEd	Red
	Ch3	Grn	Green
	Ch4	bLU	Blue
	Ch5	brn	Brown
	Ch6	bLK	Black

- 7.2.6 Settings Related to Recording

Setting	Function	
run	runtG	Recording start/stop INT/EXT selection
	tAG	Tag/channel print selection
	ALArm	Alarm print ON/OFF
	dGt.Pr	Logging print ON/OFF
	SCALE	Scale print ON/OFF
	d.SynC	Logging print Synchronous/Asynchronous print selection

- 7.2.7 Setting the Communication Function

Setting	
Com	Setting the Communication Function Local Address Data transfer rate Data Length Parity Bit Stop Bit

- 7.2.8 Initializing the Setup Data

Setting	YES/NO
Init	YES no

- 7.2.9 DI Functions

Setting	DI No.	Function	
di	di 1	oFF	No function
	di 2	rCd	Recording start/stop
	di 3	SPEEd	Chart feed speed selection
		Cmnt1	Comment 1 print(Synchronous)
		Cmnt2	Comment 2 print(Synchronous)
		Cmnt3	Comment 3 print(Synchronous)
		MAn-P	Manual print(Synchronous)
		Dt An-P	Date and time print(Synchronous)
		ACmt1	Comment 1 print(Asynchronous)
		ACmt2	Comment 2 print(Asynchronous)
		ACmt3	Comment 3 print(Asynchronous)
		AMAnP	Manual print(Asynchronous)
		ADt AP	Date and time print(Asynchronous)

- 7.2.10 Temperature Unit selection

Setting	Temp Unit	
tEMP	C	Centigrade Unit
	F	Fahrenheit Unit

- 7.2.11 Point Calibration

Setting	Function	
P Adj	ZEro	Zero point calibration
	FULL	Span point calibration
	HYS	Hysteresis at left/right move (Factory adjustment item)
	CoLor	Ribbon select calibration (Factory adjustment item)

- 7.2.12 Data Calibration

Setting	Function	
d Adj	VoLt	Voltage calibration
	rtd	Resistance temperature detector calibration
	ruC	Internal reference junction compensation calibration

- 7.3 Terminating the Engineering Mode

Setting	Function	
End	StorE	Saves a setting value
	Abort	Cancels a setting value

[Note]

When terminating the Engineering mode if you select "End" and turn off the power without carrying out "StorE", the setting will become invalid. For "End" operation, see Page 81.

Table 7.3 Initial setting value of the engineering mode

Setting items	Initial set	Remarks
★Alarm hysteresis	ON(0.5%)	
★Burnout (all channels)	OFF	
★Channel offset (all channels)	0.0	
★RJC (all channels)	Internal compensation INT	
★Dot print color (1 to 6channel)	Purple(1), Red(2), Green(3), Blue(4), Brown(5), Black(6)	
★REC record RUN/STOP trigger Channel/Tag print Alarm print Logging print Logging printing interval Logging print reference time Logging print scale print Logging print Sync/Async	 INT Ch OFF ON 6H 00:00 OFF Sync (Synchronous)	Use the REC key
★COM (communication) Address Data transfer rate Data length Parity bit Stop bit	 01 9600 8bit None 1bit	
★DI function (1 to 3 channel)	OFF	
★Temperature unit	C	

7.2.1 Alarm Hysteresis

Setting 0.5 % hysteresis to the values at alarm activation and alarm recovery is possible. (Common to all the alarms)

Example) Turning off alarm hysteresis.

Display	Operation keys	Description
ALAHS	ENT / △ PRINT / ENT	Enters the engineering mode (See the key operation in page 67). Use the △ key to display "ALAHS", and press the "ENT" key.
oFF	△ PRINT / ENT	Use the △ key to display "oFF", and press the "ENT" key.

7.2.2 Burnout ON/OFF

Setting Burnout High (to deflect the recording over the span) for each channel is possible.

Example) Setting Burnout High for Channel 4.

Display	Operation keys	Description
b.out	ENT / △ PRINT / ENT	Enters the engineering mode (See the key operation in page 67). Use the △ key to display "b.out", and press the "ENT" key.
CH4	△ PRINT / ENT	Use the △ key to display "CH4", and press the "ENT" key.
on	△ PRINT / ENT	Use the △ key to select "on", and press the "ENT" key.

7.2.3 Channel Offset

For channel offset setting, set the value to be added to an actual process variable.

Input value [-19999 to 99999]

Example) Setting the value (3.0) to be added to Channel 3.

Display	Operation keys	Description
oFSEt	ENT / △ PRINT / ENT	Enters the engineering mode (See the key operation in page 67). Use the △ key to display "oFSEt", and press the "ENT" key.
CH3	△ PRINT / ENT	Use the △ key to select "CH3", and press the "ENT" key.
3.0000	△ PRINT / ▷ FEED / ENT	Use the △ key to alter a sign/numerical value or shift a decimal point. Use the ▷ key to shift a digit. Once the numerical value is decided, press the "ENT" key.

7.2.4 Reference Junction Compensation

The following describes how to set the method for compensating an electromotive force generated between a thermocouple wire or compensation lead wire and a terminal. There are following 3 compensating methods:

- A method of compensation by the built-in temperature sensing element (INT: Internal compensation)
- A method of compensation by keeping an external compensator's temperature constant (EXT: External compensation)
- A method of compensation by one input for the recorder temperature which gets external junction box. (CH: Channel input compensation)

Internal compensation (INT) has been initially set.

Example) Setting the external compensator's temperature constant voltage for Channel 6 to 391 μV. Input the thermocouple T, compensate the external compensator's temperature 10℃ and Input the electromotive force 391 μV.

Display	Operation keys	Description
rJC	ENT △ PRINT ENT	Enters the engineering mode (See the key operation in page 67). Use the △ key to display "rJC", and press the "ENT" key
Ch6	△ PRINT ENT	Use the △ key to select "Ch6", and press the "ENT" key.
Elt	△ PRINT ENT	Use the △ key to select "Elt", and press the "ENT" key.
00391	△ PRINT ▷ FEED ENT	Use the △ key to alter a numerical value, or the ▷ key to shift a digit. Once the numerical value is decided, press the "ENT" key.
Ch6		Setting is completed. Returned to the channel setting.

Example) When Channel 1 input compensates Channel 6 reference junction.

Display	Operation keys	Description
rJC	ENT △ PRINT ENT	Enters the engineering mode (See the key operation in page 67). Use the △ key to display "rJC", and press the "ENT" key.
Ch6	△ PRINT ENT	Use the △ key to select "Ch6", and press the "ENT" key.
Ch	△ PRINT ENT	Use the △ key to select "Ch", and press the "ENT" key.
Ch 1	△ PRINT ENT	Use the △ key to select "Ch 1", and press the "ENT" key.
Ch6		Setting is completed. Returns to the channel setting.

7.2.5 Changing the Printing Color

A printing color can be changed for each channel.

Example) Setting the black color as a printing color.

Display	Operation keys	Description
Color	ENT △ PRINT ENT	Enters the engineering mode (See the key operation in page 67). Use the △ key to display "Color", and press the "ENT" key.
Ch 1	△ PRINT ENT	Use the △ key to select "Ch 1", and press the "ENT" key.
bLK	△ PRINT ENT	Use the △ key to display "bLK", and press the "ENT" key.
Color	△ PRINT ▷ FEED ENT	Setting is completed. Returns to the Printing Color Setting screen.

7.2.6 Settings Related to Recording

Setting a recording start/stop trigger, selecting tag/channel print, alarm print, logging print, and scale print ON/OFF are possible.

(1) Trigger setting for recording start/stop

Sets whether the trigger of recording start/stop should be “REC” key or DI.

Example) Setting DI as the recording start/stop trigger.

Display	Operation keys	Description
run	ENT △ PRINT ENT	Enters the engineering mode (See the key operation in page 67). Use the △ key to display "run", and press the “ENT” key.
runtG	△ PRINT ENT	Use the △ key to select "runtG", and press the “ENT” key.
EIlt	△ PRINT ENT	Use the △ key to display "EIlt", and press the “ENT” key.
runtG	△ PRINT ▷ FEED ENT	Setting is completed. Returns to the Recording Start/Stop Setting screen.

[Note]

When "EIlt" is displayed, “RUN/STOP” key does not function. Set “rCd” to DI.

See DI functions in page 77.

(2) Tag/channel print selection

In the case of logging print; or manual print, this sets whether a tag or channel should be printed.

Example) Setting the tag.

Display	Operation keys	Description
run	ENT △ PRINT ENT	Enters the engineering mode (See the key operation in page 67). Use the △ key to display "run", and press the “ENT” key.
tAG	△ PRINT ENT	Use the △ key to select "tAG", and press the “ENT” key.
tAG	△ PRINT ENT	Use the △ key to display "tAG", and press the “ENT” key.
tAG		Setting is completed. Returns to the Tag/Channel Setting screen.

(3) Alarm print ON/OFF

Sets the alarm print ON/OFF.

When ON1, prints the alarm occurring and the alarm recovering. When ON2, prints only the alarm occurring.

Example) When sets both the alarm occurring and the alarm recovering.

Display	Operation keys	Description
run	ENT △ PRINT ENT	Enters the engineering mode (See the key operation in page 67). Use the △ key to display "run", and press the "ENT" key.
ALArA	△ PRINT ENT	Use the △ key to select "ALArA", and press the "ENT" key.
on1	△ PRINT ENT	Use the △ key to display "on1", and press the "ENT" key.
ALArA		Setting is completed. Returns to the Alarm Print Setting screen.

(4) Logging print ON/OFF

Sets logging print to ON/OFF.

In the case of logging print ON, this sets the print start time and print interval.

Example) When you want logging print to start at 18:00 every day.

Display	Operation keys	Description
run	ENT △ PRINT ENT	Enters the engineering mode (See the key operation in page 67). Use the △ key to display "run", and press the "ENT" key.
dOt.Pr	△ PRINT ENT	Use the △ key to select "dOt.Pr", and press the "ENT" key.
on	△ PRINT ENT	Use the △ key to display "on", and press the "ENT" key.
18:00 (Print Start Time)	△ PRINT ▷ FEED ENT	Use the △ key to alter a numeral, and ▷ key to shift a digit. Then, set the time and press the "ENT" key.
24H (Interval)	△ PRINT ENT	Use the △ key to display "24H", and press the "ENT" key. (Select from 10 min, 15 min, 20 min, 30 min, 1H, 2H, 3H, 4H, 6H, 8H, 12H and 24H)
dOt.Pr		Setting is completed. Returns to the Logging print Setting screen.

(5) Scale print ON/OFF

Set scale print to ON/OFF.

Example) Setting scale prints to OFF.

Display	Operation keys	Description
run	ENT △ PRINT ENT	Enters the engineering mode (See the key operation in page 67). Use the △ key to display "run", and press the "ENT" key.
SCALE	△ PRINT ENT	Use the △ key to select "SCALE", and press the "ENT" key.
oFF	△ PRINT ENT	Use the △ key to display "oFF", and press the "ENT" key.
SCALE		Setting is completed. Returns to the Scale Print Setting screen.

(6) Logging print Synchronous/Asynchronous

Sets logging print to synchronous print/asynchronous.

Example) Setting logging print to asynchronous.

Display	Operation keys	Description
run	ENT △ PRINT ENT	Enters the engineering mode (See the key operation in page 67). Use the △ key to display "run", and press the "ENT" key.
d.SynC	△ PRINT ENT	Use the △ key to select "d.SynC", and press the "ENT" key.
ASynC	△ PRINT ENT	Use the △ key to display "ASynC", and press the "ENT" key.
d.SynC		Setting is completed. Returns to the logging print Sync/Async Setting screen.

7.2.7 Setting the Communication Function

Sets Local Address, Data transfer rate (communication speed), Data Length, Parity Bit, and Stop Bit.

Example) Local Address: 02, Data transfer rate: 1200bps, Data Length: 7 bit, Parity Bit: even, Stop Bit: 2 bit.

	Display	Operation keys	Description
	CoM	ENT △ PRINT ENT	Enters the engineering mode (See the key operation in page 67). Use the △ key to display "CoM", and press the "ENT" key.
A	Adr02	△ PRINT ENT	Use the △ key to display "Adr02", and press the "ENT" key.(Select from Adr01 to Adr32)
b	1200	△ PRINT ENT	Use the △ key to display " 1200", and press the "ENT" key. (Select from 1200, 2400, 4800, 9600)
d	7bit	△ PRINT ENT	Use the △ key to display "7bit", and press the "ENT" key.(Select 7 bit or 8 bit)
P	EVEn	△ PRINT ENT	Use the △ key to display "EVEn", and press the "ENT" key. (Select from EVEN, ODD and NONE)
S	2bit	△ PRINT ENT	Use the △ key to display "2bit", and press the "ENT" key. (Select 1 bit or 2 bit)
	CoM		Setting is completed. Returns to the Communication Function Setting screen.

7.2.8 Initializing the Setup Data

Initializes the setup data to the status when it was shipped.

Be careful, because all the setup data is initialized. Calibration data is not initialized.

Example) Initializing you initialize the Setup Data.

	Display	Operation keys	Description
	Init	ENT △ PRINT ENT	Enter the engineering mode (See the key operation in page 67). Use the △ key to display "Init", and press the "ENT" key.
	YES	△ PRINT ENT	Use the △ key to select "YES", and press the "ENT" key.
	Init.ok		Initialization is completed.

7.2.9 DI Functions

Allocates the functions to 3 DIs. There are following 12 DI functions.

No function	: oFF
Manual print (Sync.)	: MAn-P (Positive edge: running start)
Manual Print (Async.)	: MAAnP (Positive edge: running start)
RUN/STOP trigger function	: rCd (ON:RUN, OFF:STOP)
Date/Time Print (Sync.)	: tI A-P (Positive edge: running start)
Date/Time Print (Async.)	: AtI AP (Positive edge: running start)
Chart feed speed selection	: SPEEd (ON:Spd-1, OFF:Spd-2)
Comment print 1 to 3 (Sync.)	: CAnt 1、CAnt2、CAnt3 (Positive edge: running start)
Comment print 1 to 3 (Async.)	: ACAt 1、ACAt2、ACAt3 (Positive edge: running start)

Example) Setting comment prints 3 for DI3.

Display	Operation keys	Description
dI	ENT △ PRINT ENT	Enters the engineering mode (See the key operation in page 67). Use the △ key to display "dI ", and press the "ENT" key.
dI 3	△ PRINT ENT	Use the △ key to select "dI 3", and press the "ENT" key.
CAnt3	△ PRINT ENT	Use the △ key to display "CAnt3", and press the "ENT" key.
dI 3		Setting is completed. Returns to the DI3 Function Setting screen.

[Note]

- DI synchronous does not print in STOP status, but DI asynchronous prints in STOP status.
- Be sure to set OFF when DI function (Option: RE6) is not designated.

7.2.10 Temperature Unit selection

Changes the setting of a temperature unit.

Example) Setting a temperature unit to Fahrenheit.

Display	Operation keys	Description
tEAP	ENT △ PRINT ENT	Enters the engineering mode (See the key operation in page 67). Use the △ key to indicate "tEAP", and press the "ENT" key.
F	△ PRINT ENT	Use the △ key to select "F", and press the "ENT" key.
tEAP		Setting is completed. Returns to the Temperature Unit Setting screen.

7.2.11 Point Calibration

Calibrates a dot printing position.

ZEro : Calibration of the zero point position

FULL : Calibration of the span point position

[Note]

Point calibration "HYS" and "CoLor" are setup item before shipment. Do not change the setup value.

Example) Calibrating the zero point.

Display	Operation keys	Description
P AdJ	ENT △ PRINT ENT	Enters the engineering mode (See the key operation in page 67). Use the △ key to display "P AdJ", and press the "ENT" key.
ZEro	△ PRINT ENT	Use the △ key to select "ZEro", and press the "ENT" key.
00003	△ PRINT ▷ FEED ENT	The instrument starts to feed and print the chart paper. With the △(left move) and ▷ (right move), adjust the 0 mm position of the chart paper and the recording position. Press the "ENT" key. Display indicates the set counter value.
ZEro		Setting is completed. Returns to the Zero Point Calibration screen.

Example) Calibrating the span point.

Display	Operation keys	Description
P AdJ	ENT △ PRINT ENT	Enters the engineering mode (See the key operation in page 67). Use the △ key to display "P AdJ", and press the"ENT" key.
FULL	△ PRINT ENT	Use the △ key to select "FULL", and press the "ENT" key.
01003	△ PRINT ▷ FEED ENT	The instrument starts to feed and print the chart paper. With the △ (left move) and ▷ (right move), adjust the 100 mm position of the chart paper and the recording position. Press the "ENT" key. Display indicates the set counter value.
FULL		Setting is completed. Returns to the Span Point Calibration screen.

7.2.12 Data Calibration

Calibrates the voltage, resistance temperature detector, and reference junction compensation.

Volt : Calibration of the voltage

rtd : Calibration of the resistance temperature detector

rJC : Calibration of reference junction compensation

Example) Calibrating the voltage at Channel 1.

Display	Operation keys	Description
dAdJ	ENT △ PRINT ENT	Enters the engineering mode (See the key operation in page 67). Use the △ key to display "d AdJ", and press the "ENT" key. Use the △ key to select "Volt", and press the "ENT" key. Selects the channel where an instrument for calibration such as a mV generator is connected, and then, press the "ENT" key.
Volt	△ PRINT ENT	
Ch 1	△ PRINT ENT	
V 00mV	ENT	Enter 0 mV. After 30 seconds, make sure that the ALM lamp is unlit and press the "ENT" key.
V 15mV	ENT	Enter 15 mV. After 10 seconds, make sure that the ALM lamp is unlit and press the "ENT" key.
V 25mV	ENT	Enter 25 mV. After 10 seconds, make sure that the ALM lamp is unlit and press the "ENT" key.
V 35mV	ENT	Enter 35 mV. After 10 seconds, make sure that the ALM lamp is unlit and press the "ENT" key.
V 55mV	ENT	Enter 55 mV. After 10 seconds, make sure that the ALM lamp is unlit and press the "ENT" key.
V 200mV	ENT	Enter 200 mV. After 10 seconds, make sure that the ALM lamp is unlit and press the "ENT" key.
V 001V	ENT	Enter 1 V. After 10 seconds, make sure that the ALM lamp is unlit and press the "ENT" key.
V 005V	ENT	Enter 5 V. After 10 seconds, make sure that the ALM lamp is unlit and press the "ENT" key.
V 010V	ENT	Enter 10 V. After 10 seconds, make sure that the ALM lamp is unlit and press the "ENT" key.
StorE	△ PRINT ENT	If the calibration is correct, select "StorE" with the △ key, and if incorrect, select "Abort", respectively. Then, press the "ENT" key.

[Note]

For calibration of voltage input, only one channel calibration is effective to all the channel.

Example) When calibrating the resistance temperature detector at Channel 2.

Display	Operation keys	Description
d Adj	ENT △ PRINT ENT	Enters the engineering mode (See the key operation in page 67). Use the △ key to display "d Adj", and press the "ENT" key. Use the △ key to select "rtd", and press the "ENT" key. Select the channel where the instrument for calibration such as dial resistor is connected and then, press the "ENT" key.
rtd	△ PRINT ENT	
Ch2	△ PRINT ENT	
r 100	ENT	Enter 100 Ω. After 10 seconds, make sure that the ALM lamp is unlit and press the "ENT" key.
r 150	ENT	Enter 150 Ω. After 10 seconds, make sure that the ALM lamp is unlit and press the "ENT" key.
r300	ENT	Enter 300 Ω. After 10 seconds, make sure that the ALM lamp is unlit and press the "ENT" key.
StorE	△ PRINT ENT	If the calibration is correct, select "StorE" with the △ key, and if incorrect, select "Abort", respectively. Then, press the "ENT" key.

[Note]

When calibrating RTD for a channel, short-circuit the other channels. Recording requires RTD calibration for every channel.

[Note]

During calibration, ALM lamp displays following conditions below.

①When the ALM lamp is unlit

The calibration is within the range.

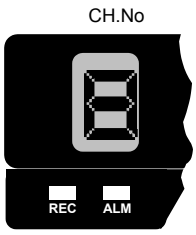

②When the ALM lamp is blinking

Assessing the input value.

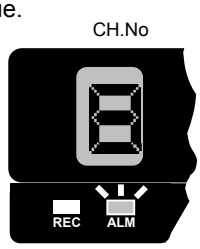

: The lamp is unlit.

: The lamp is lit.

③When the ALM lamp is lit

The calibration is not within the range.
Make sure that the connection is proper and input is correct.

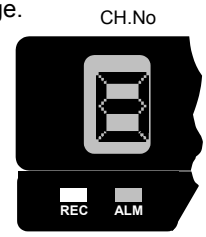

Example) Setting the terminal temperature for Channel 1.

Display	Operation keys	Description
d AdJ	ENT △ PRINT ENT	Enters the engineering mode (See the key operation in page 67). Use the △ key to display "d AdJ", and press the "ENT" key.
rJC	△ PRINT ENT	Use the △ key to select "rJC", and press the "ENT" key.
r Ch 1	△ PRINT ENT	Select the Channel to set, and press the "ENT" key.
24.5	ENT	Measures and displays the current terminal temperature. Press the "ENT" key, and the display turns to temperature setting.
25.0	△ PRINT ▷ FEED ENT	Use the △ key to alter a numeral, and ▷ key to shift a digit. Then, press the "ENT" key. See 9.5 (3) Calibration of Reference Junction Compensation.
StorE	△ PRINT ENT	If the calibration is correct, select "StorE" with the △ key, and if incorrect, select "Abort", respectively. Then, press the "ENT" key.

[Note]

When calibrating the terminal temperature, select a channel to calibrate for channel 1 to channel 3, and select another channel for channel 4 to channel 6. Calibrate these channels separately.

7.3 Terminating the Engineering Mode

Example) The following figure describes how to save the setting data.

Display	Operation keys	Description
End	△ PRINT ENT	Use the △ key to display "End", and press the "ENT" key.
StorE	ENT	Use the △ key to select "StorE", and press the "ENT" key. The settings of the engineering mode have been saved. Recording starts under the new settings.

[Note]

When terminating the Engineering mode, if you select "End" and turn off the power without selecting "StorE", the settings will become invalid. Selecting "Abort" invalidates the settings and starts recording under the previous settings.

8. COMMUNICATION

8.1 General Description

8.1.1 General Description of Functions

This Recorder has the following communication functions:

① Outputting the process variable

Process variable, alarms status, etc.

② Outputting the setting value

Reading the setup data such as a range, chart feed speed, etc.

③ Inputting the setting value

Writing the setup data such as a range, chart feed speed, etc.

④ Controlling of the recorder (Partially)

Selection to print, recording start/stop and changing display etc.

For the functions ② to ④, see the separate volume Communication Command Reference Manual (sold separately). Setting the engineering mode is not possible as for communication.

8.1.2 Transmission Specifications

(1) Communication system	:Start-stop synchronous, half-duplex communications
(2) Connection	:One-to-one(RS-232C), One-to-N(RS-485); N = 1 to 32
(3) Communication speed	:1200, 2400, 4800, or 9600 bps
(4) Start bit	:1 bit
(5) Stop bit	:1 or 2 bits
(6) Parity	:Even, Odd, or None
(7) Data length	:7 or 8 bits

8.1.3 Data structure

(1) Character structre

In order to send 1data (byte) in start-stop synchronous communication, characters structure is as follows.

Start Bit (1) + Data Bit (7 or 8) + Parity Bit (1) + Stop Bit (1 or 2)

(2) Data format

The communication data is sent with data terminators added to multiple characters. On receiving these terminators, the recorder starts analyzing the communication data.

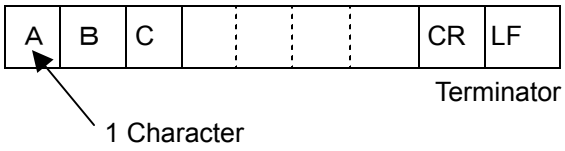

(3) Error Detection

If the recorder receives the data that has resulted in a signal error such as parity error, framing error, etc. due to the noise or hardware troubles, it will ignore that data. Consequently, a data format error results, determining that the data is not sent in the normal data format. The receiving function does not execute that command and the transmitting function does not reply. The data format error status can be confirmed by the ESC S command (described later).

(4) Control codes

ESC: 1B HEX (hexadecimal)

This code is used for an escape sequence such as opening/closing the link.

It cannot be treated as part of the text data.

CR: 0D HEX (hexadecimal)

This data is added to the end of the text data together with the LF data.

This code cannot be treated as part of the text data.

LF: 0A HEX (hexadecimal)

This data is added to the end of the text data together with the CR data.

This code cannot be treated as part of the text data.

8.2 Opening/Closing the Link

To communicate with the recorder, you must establish a connection between the host computer and the recorder. In the case of one-to-N communications, it is necessary to inform each recorder to which recorder the text is being sent. If a link open command is sent to multiple recorders through their send function, all the recorders, which have received the command, will send and cannot receive the normal data.

8.2.1 Open Command

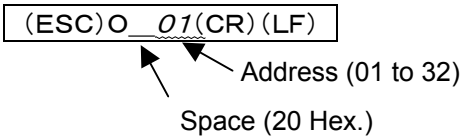

To communicate the recorder, host computer must issue this command and memorize that it has issued this command.

8.2.2 Close Command

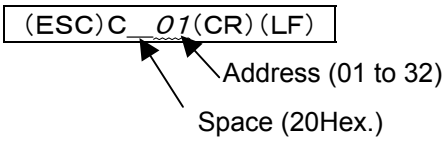

If it is required that the data is sent to the recoders other than the open command is issued, this close command must be issued to those recorders open command was issued.

8.3 Outputting the Process Variable

8.3.1 Specifying the Process Variable Output

TS*0*(CR)(LF)

Once this command is received, the recorder transfers the process variable to the transmission buffer, when the (ESC) T command is received.

8.3.2 Updating the Data

(ESC)T(CR)(LF)

Once this command is received, the recorder transfers the update process variable to the transmission buffer.

8.3.3 Specifying the Process Variable Output Order (At BINARY Mode Output)

BO*0*(CR)(LF) Outputs start from the upper byte.

BO*1*(CR)(LF) Outputs start from the lower byte.

The recorder outputs starting from the lower byte, unless specified.

8.3.4 Outputting the Data

FM*0*, S__CH, E__CH Specifies the ASCII mode output.

FM*1*, S__CH, E__CH Specifies the BINARY mode output.

S__CH :Output start channel *01 to 06*

E__CH :Output end channel *01 to 06*

※ When the number of channel is 1, specify (S_CH) = (E_CH).

8.3.5 Process Variable Transmission Format (ASCII)

DATE (YY) (MM) (DD) (CR) (LF)	Date
Year Month Day	
TIME (HH) (MM) (SS) (CR) (LF)	Time
Hour Minute Second	

(DS *1*) (DS*2*) (ALM *1*) (ALM*2*) (ALM*3*) (ALM*4*) (UNIT *1 to 6*) (CHNo.), (DATA) (CR) (LF)

(1) DS *1* :Data information 1 (1 byte)

N : Normal

D : Difference computation data

S : Sum computation data

M : Average computation data

R : Square root computation data

C : Decade computation data

S : Skip (All the data is space)

(2) DS*2* : Data information 2 (1 byte)

E : Final data

__(Space) : Other data

(3) ALM *1 to 4* : Alarm information (1 byte each, 4 bytes in total)

H : High limit alarm

L : Low limit alarm

__(Space) : Alarm OFF or alarm setting OFF.

(4) UNIT *1 to 6* :UNIT(6 bytes)

Returns the setting unit in terms of code. (When sending the 7-bit data, the higher 1 bit is missing.)

(5) CHNo. : Channel number (2 bytes)

01～06

(6) DATA :Process variable

Sign(1 byte) :“＋” or “－”

Data mantissa section (6 bytes) :*00000 to 99999*

Data exponent section (4 bytes) : E (Sign: 1 byte) (Multiplier: 2 bytes)

<Example> ＋*99999E－02*

8.3.6 Process Variable Transmission Format (BINARY)

Output bytes	Date and time	Process variable 1		Process variable 6

Output bytes (2 bytes) :5×n (specified number of channels)+6

(1) Date and time (6 bytes):

①	②	③	④	⑤	⑥

① Year :*00*H to *63*H (00H for the year 2000)

② Mouth :*01*H to *0*CH

③ Day :*01*H to *1*FH

④ Hour :*00*H to *17*H (24-hour system)

⑤ Minute:*00*H to *3*BH

⑥ Second:*00*H to *3*BH

(2) Process variable (5 bytes):

CHNo.	A*2*	A*1*	A*4*	A*3*	DATA*1*	DATA*2*

CHNo.(1BYTE) :Channel number *01*H to *06*H

A1 to A4 (2BYTES) :Alarm type activated at each alarm level.

1 :High limit alarm

2 :Low limit alarm

0 :Alarm OFF or alarm setting OFF

Example) Bit Sequence.

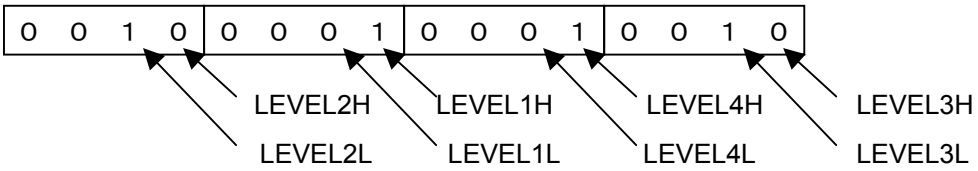

LEVEL×H :High limit alarm bit at the alarm level x

LEVEL×L :Low limit alarm bit at the alarm level x

DATA*1*,DATA*2* (2BYTES) : Process variable

−*32000 to* +*32000* (2-byte hexadecimal data)

The higher and lower bytes can be reversed by the BO command.

If Skip is specified, *8080*H will be output.

[Note]

- Outputs a data over -32000 to +32000 as the overflow. An overflow 7E7E is output on plus side, and 8181 is output on minus side. (Excluding the Decade channel.)
- Data output of the Decade channel is as follows regardless of the BO command. The upper byte outputs a mantissa (10 to 99). The lower byte outputs an exponent (-19 to 19). A decimal point position is fixed on 1 digit.

8.4 Outputting the Unit and Decimal Point Position Data

8.4.1 Specifying the Unit and Decimal Point Position Data Output

TS2(CR)(LF)

Once this command is received, the recorder transfers the unit and decimal point position data to the transmission buffer, when the (ESC) T command is received.

8.4.2 Updating the Data

(ESC)T(CR)(LF)

Once this command is received, the recorder transfers the update unit and decimal point position data to the transmission buffer.

8.4.3 Outputting the Data

LF, S__CH, E__CH

S__CH :Output start channel *01 to 06*

E__CH :Output end channel *01 to 06*

※ When the number of channel is 1, specify (S_CH) = (E_CH). __(Space)

8.4.4 Data Format

(DS*1*)(DS*2*)(CHNo.)(UNIT*1*～*6*)(DP)

(1) DS*1* : Data information 1 (1 byte)

N : Normal

D : Difference computation data

S : Sum computation data

M : Average computation data

R : Square root computation data

C : Decade computation data,

S : Skip (All the data is space)

(2) DS*2* : Data information 2 (1 byte)

E :Final data,

__(Space) :Other data

(3) CHNo. :Channel number (2bytes) ;*01 to 06*

(4) UNIT *1 to 6* :UNIT

Returns the setting unit in terms of code. (When sending the 7-bit data, the higher 1 bit is missing.)

(5) DP :Decimal point information (1 byte) ;*0 to 4*

[Note]

By the range setting, a decimal point position may differ from the one on a display screen.

8.5 Outputting the Status

If the open-link recorder has a data error on its link, it will save the error as a communication error in the internal status area. The (ESC S) command reads this status. Issuing this command, the on-going error is cleared.

8.5.1 Status Output Command

ESC S(CR)(LF)

Receiving this command outputs the status for the command received so far.

8.5.2 Status Output

E	R	X	X	CR	LF

XX : *00 to 19*

Table 8.1 Status output list

Status factor / Status output	Status factor		
	A/D END	Syntax error	Running out of chart paper
ER 00 C_RL_F			
ER 01 C_RL_F	○		
ER 02 C_RL_F		○	
ER 03 C_RL_F	○	○	
ER 04 C_RL_F			
ER 05 C_RL_F	○		
ER 16 C_RL_F			○
ER 17 C_RL_F	○		○
ER 18 C_RL_F		○	○
ER 19 C_RL_F	○	○	○

○ : The factor from which status is ENABLE.

A/D END : When carring out AD conversion ends, it occurs.

Syntax error : It occurs during a communication error or a command error.

Running out of chart paper : When Running out of chart paper is found, it occurs.
(When running out of chart paper option has been attached.)

8.6 Data Reception Example

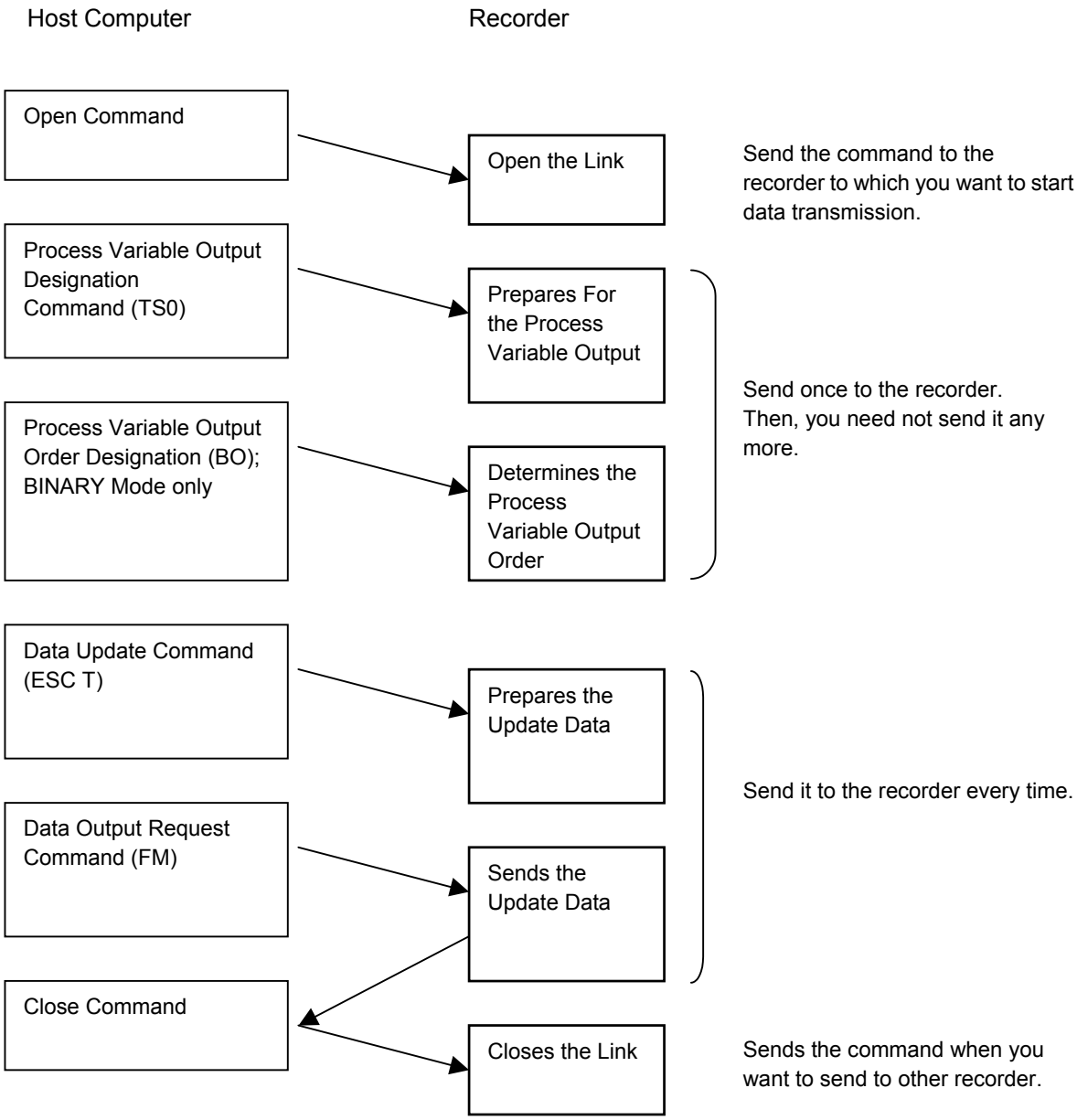

9. MAINTENANCE

Inspect the following items in order to use this instrument effectively.

- Inspection
- Cleaning
- Replacing Consumables for the new one
- Adjustment of the Dot Printing Position
- Calibration

9.1 Inspection

Inspect the condition of operation periodically to use it effectively.

When a defect is found, see Chapter 10 “Troubleshooting”.

◆Is trend recording deflected?

◆Is recording indication done properly?

・Are there any big errors in indicated values or dot printing position?

・Is there improper dot printing?

・Are there any blurred dot printing or printout?

・Is printout proper?

◆Is the chart paper fed properly?

・Is the chart paper folded properly?

・Aren’t the feed holes in the chart paper torn off or broken?

・Is the chart speed normal?

◆Is there any abnormal sound?

9.2 Cleaning

Many parts of this instrument are made of plastic. Use a dry cloth to wipe the parts to keep them clean.

[Note]

Do not use any organic solvent.

9.3 Replacing Consumables

In order to use this instrument effectively, replace the consumable parts following the table.

No.	Name	Type	Period	Remarks	Quantity
1	Chart paper	H-10100	33 days	When chart feed speed is 20mm/h	1
2	Ribbon cassette	WPSR188A000001A	3months	When chart feed speed is 20mm/h	1

[Note]

① When recording with a ribbon, a dot printing color phases out. To ensure clear recording, replace the ribbon cassette as soon as possible.

② Use the ribbon cassette within one year after its purchase. Due to evaporation of ink, a printing color phases out as time goes on.

9.4 Adjust Dot Printing Position (Point Calibration)

The following describes how to adjust a printing position on the chart paper.

You are well advised to adjust it annually in order to keep recording accurate.

How to Adjust

It is unnecessary to enter the reference. Leave the recorder as it is and adjust it according to the instructions in 7.2.11 Point Calibration.(See page 78)

9.5 Calibration (Data Calibration)

Calibrate a process variable input annually in order to keep measurement accurate.

[Note]

Prior to calibration, warm up for 30 minutes or more after power-on.

Devices required for calibration

- Precision voltage(current) generator (Jointly use a digital voltmeter with accuracy of ±0.02 % or less as required)
- Precision dial resistor

(1) Calibration of Voltage

Conduct calibration in the case of voltage, current or thermocouple input. For thermocouple input, calibrate reference junction compensation together.

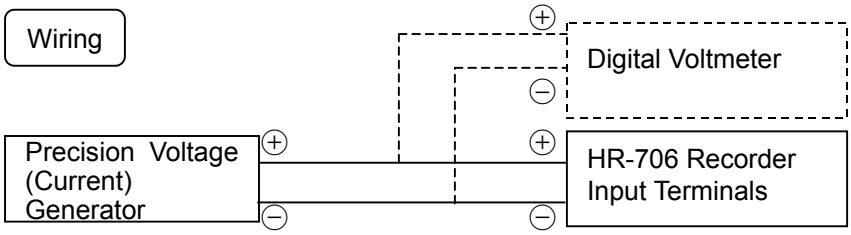

Calibrate the voltage according to the instructions in 7.2.12 Data Calibration (Calibration of the voltage).(See page 79)

[Note]

① Calibrate at any one channel.

② When a shunt resistor is attached to the input terminal block in the case of current input, detach it prior to calibration.

(2) Calibration of Resistance temperature detector (RTD)

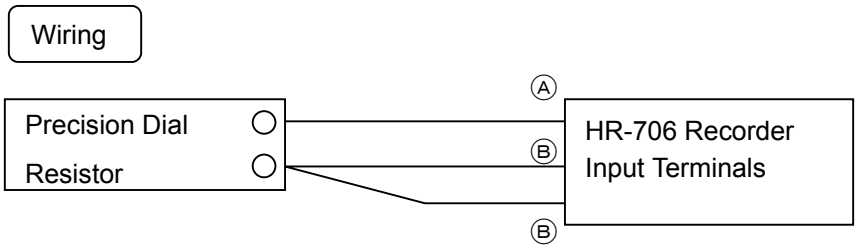

Calibrate RTD according to the instructions in 7.2.12 Data Calibration (Calibration of the resistance temperature detector).(See page 80)

[Note]

The dispersion of resistance value for each wire must be 6 m Ω or less.

Calibrate RTD in all channels.

Short-circuit the input terminals except calibration channel.

(3) Calibration of Reference Junction Compensation

Calibrate the reference junction compensation in the case of thermocouple input.

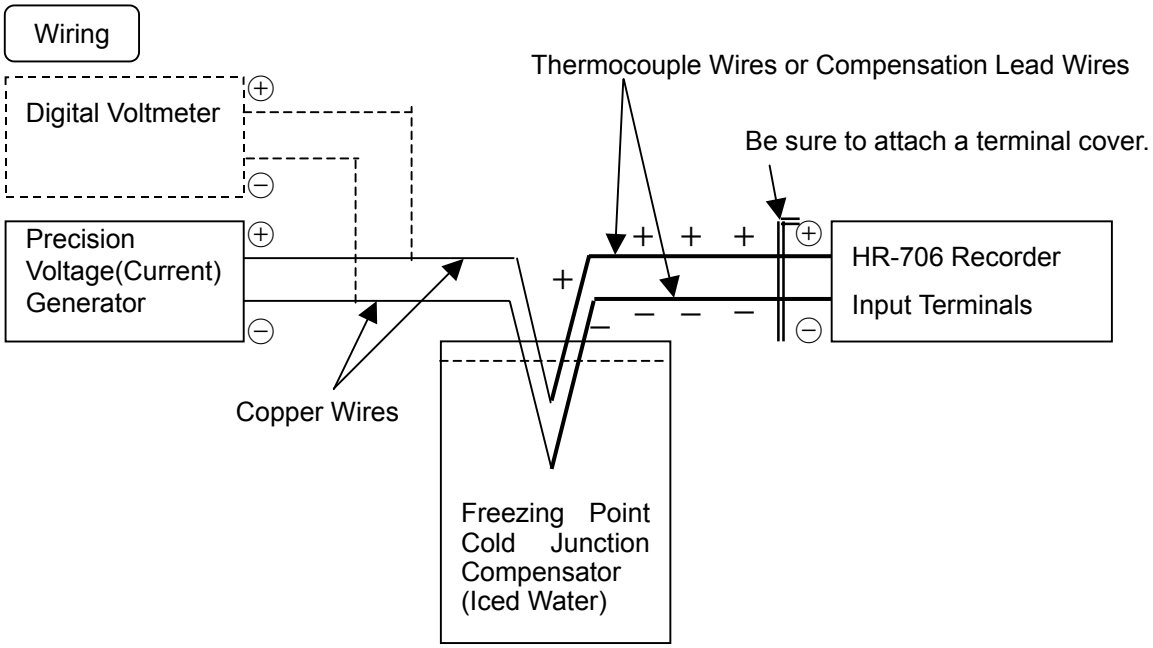

Example) Connect the input to Channel 1 and set the calibration when the thermocouple input value (RMC measurement) is -0.5 (input 0℃), the measured RJC temperature is 24.5℃.

1) Check the Process variable when impressing 0.000mV±2 μV to Channel 1 by the voltage generator beforehand. (In this example, it is -0.5℃.)
2) Check the terminal temperature of Channel 1 at the data calibration in the enginnering mode (Reference junction compensation). (In this example, it is 24.5℃.)
3) Set the value which is added the difference (0.5℃) with true value as the right RJC temperature.

［24.5－（－0.5）＝25.0℃］

Calibrate RJC according to the instructions in 7.2.12 Data Calibration (Calibration of reference junction compensation).(See page 81)

[Note]

① This calibration is conducted when compensation by the recorder's built-in temperature sensing element (INT: internal compensation) is selected as the reference junction compensation method.

② Wire to Channels 1 and 4 to calibrate.

③ After wiring, attach the terminal covers and wait for 5 minutes or more, then calibrate it.

10. TROUBLESHOOTING

10.1 Troubleshooting

10.1.1 Trouble Items

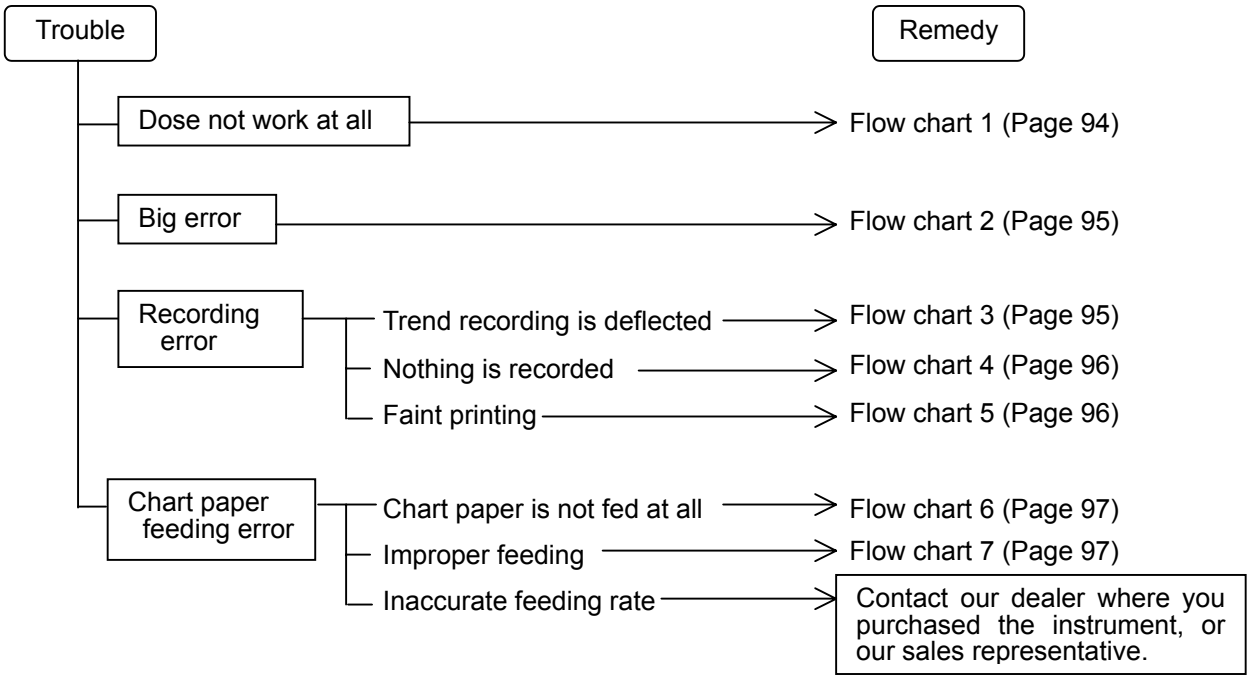

10.1.2 When the Recorder Dose not Work at All

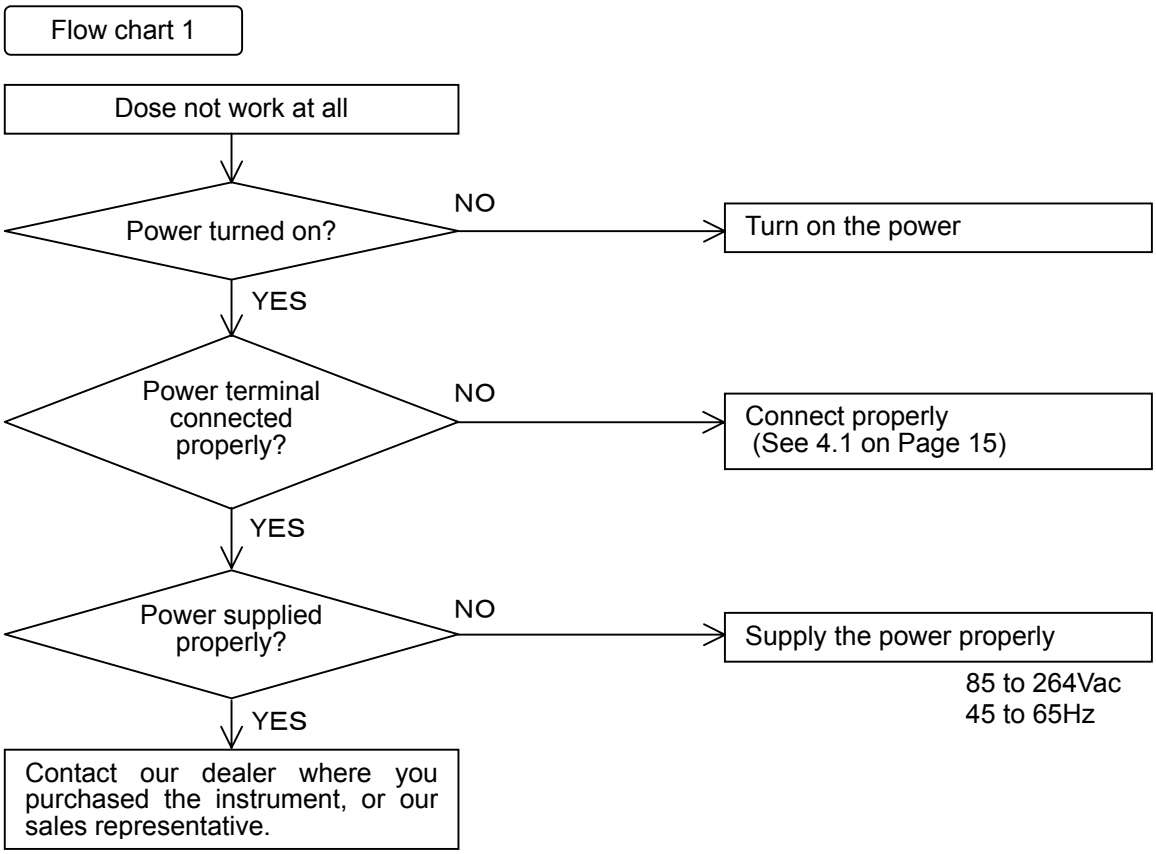

10.1.3 When there is a Big Error

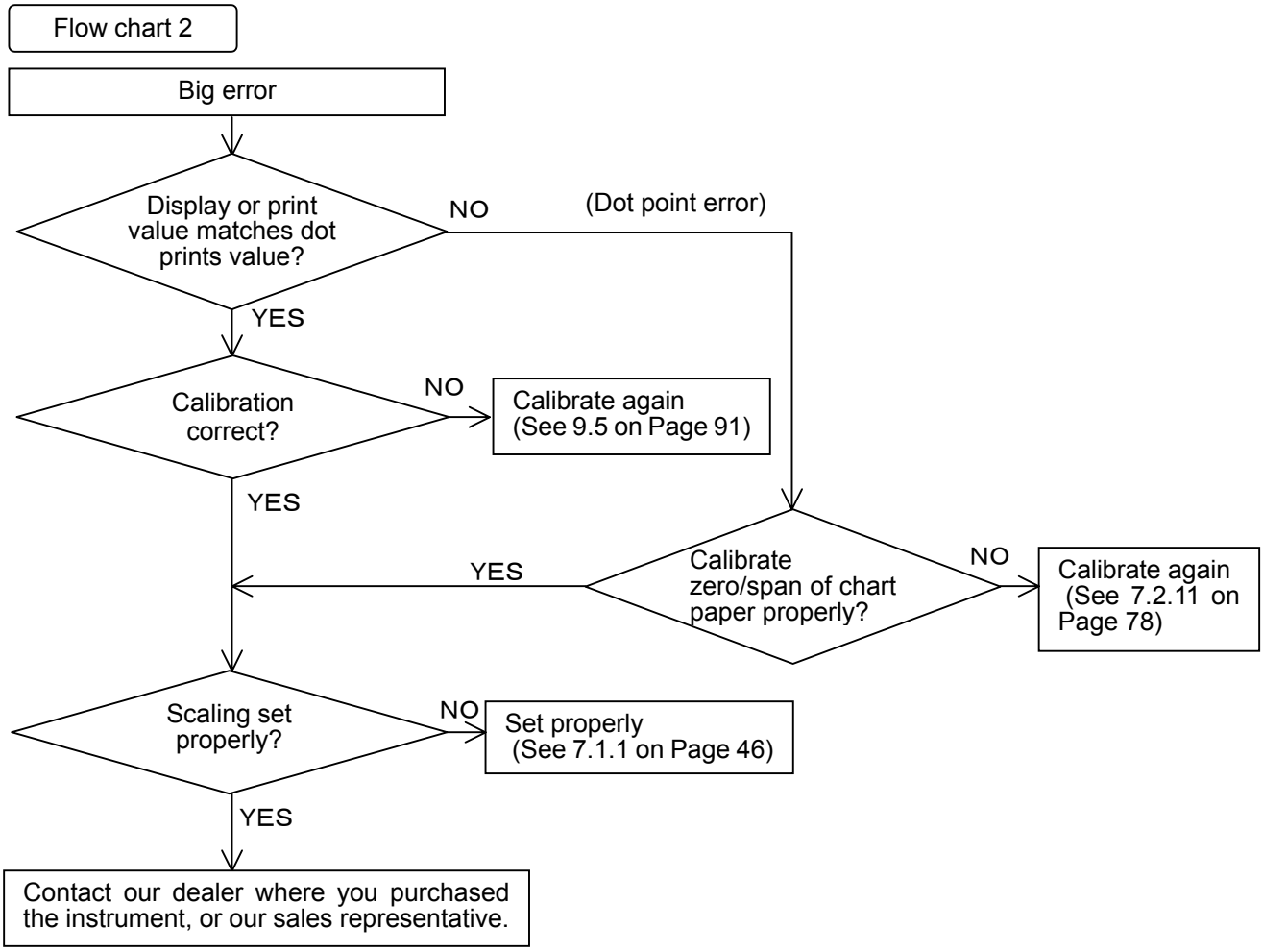

10.1.4 When the Trend Recording is Deflected

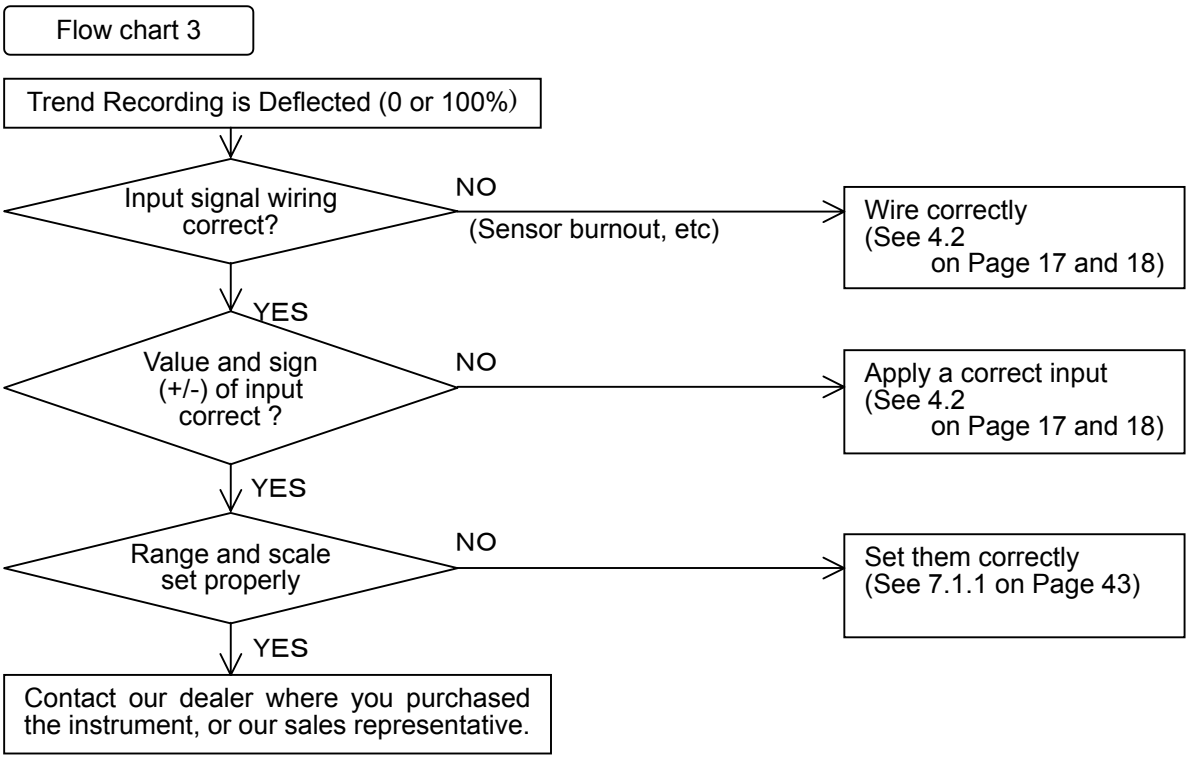

10.1.5 When nothing is recorded

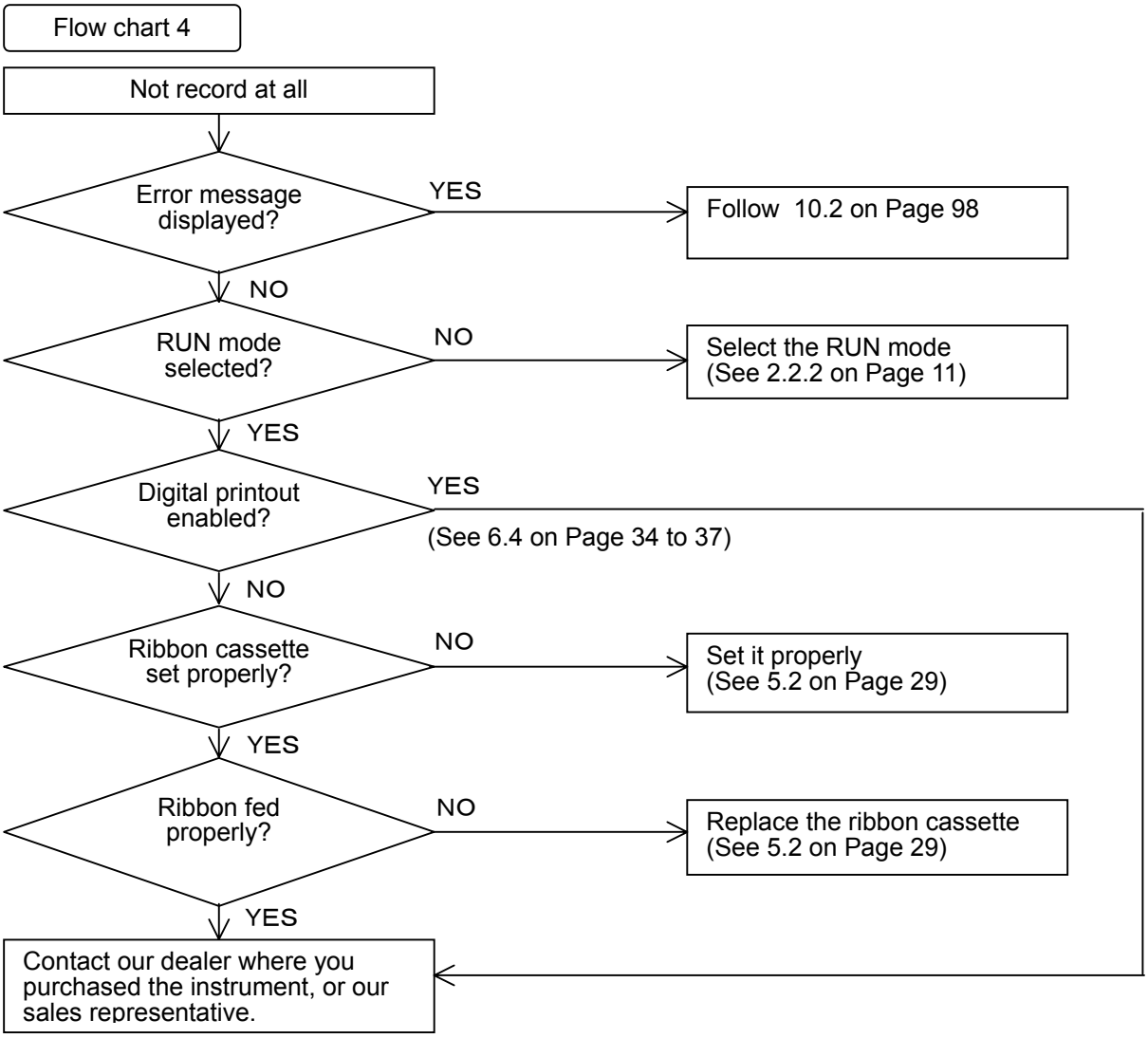

10.1.6 When Recording is Faint

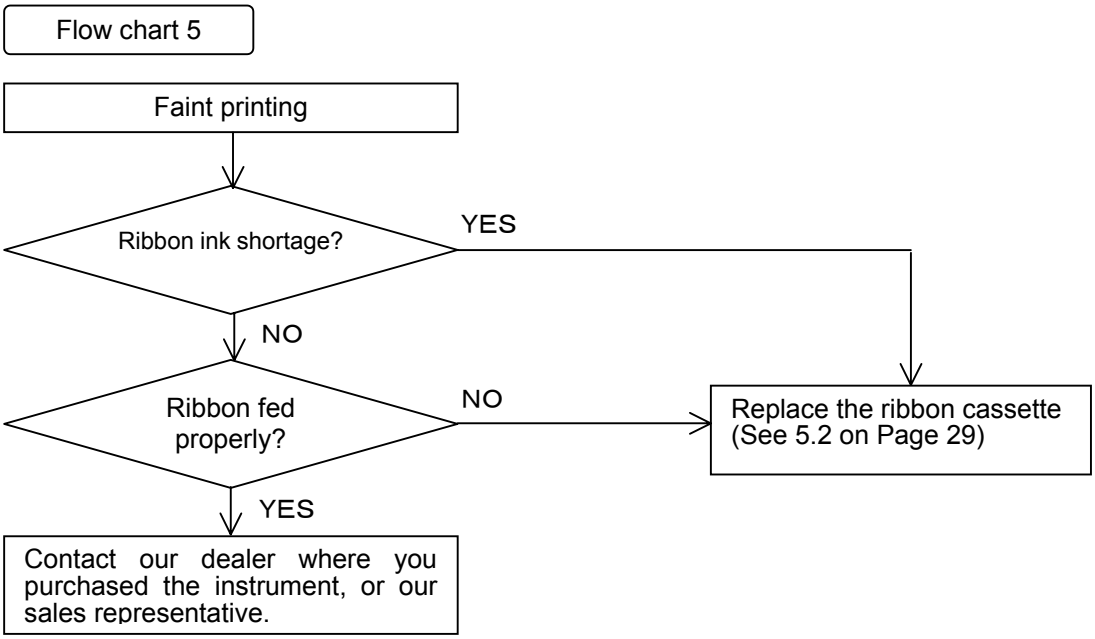

10.1.7 When the Chart Paper is not fed at All

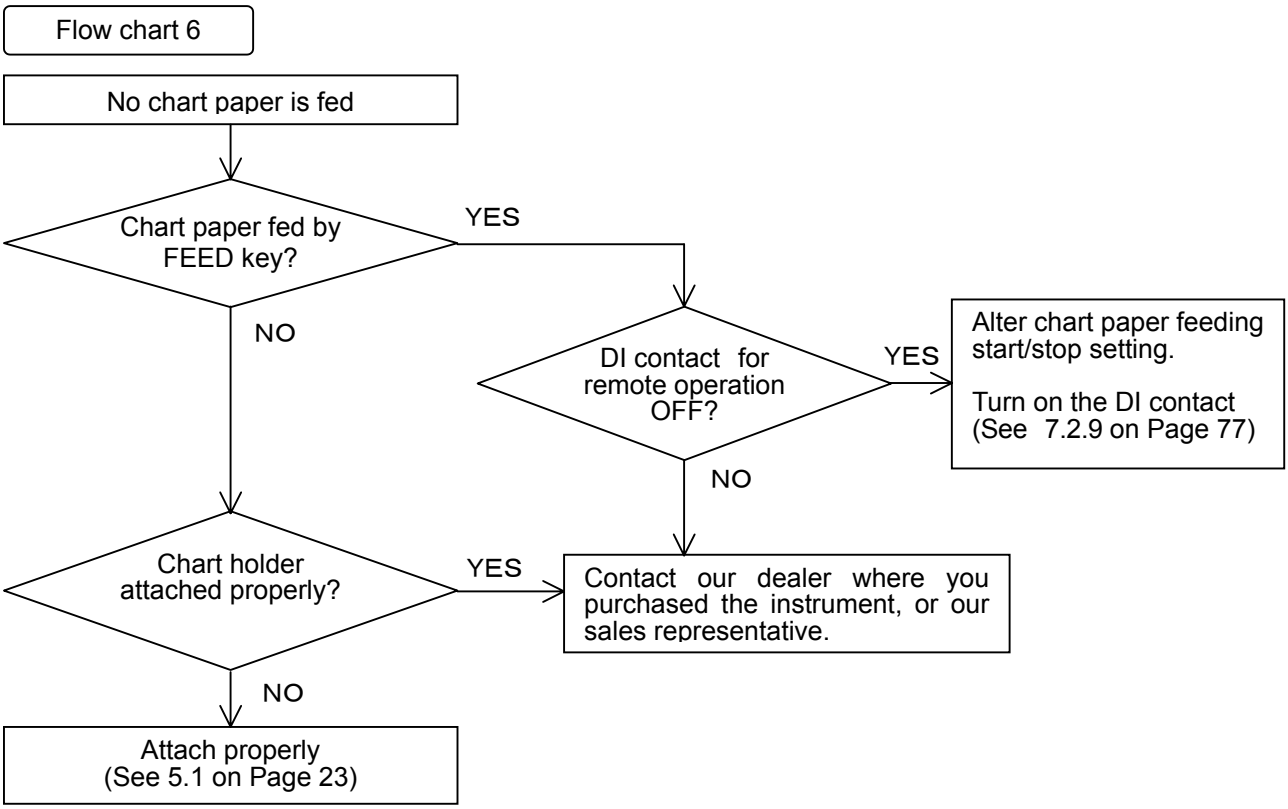

10.1.8 When the Chart Paper is not fed Properly

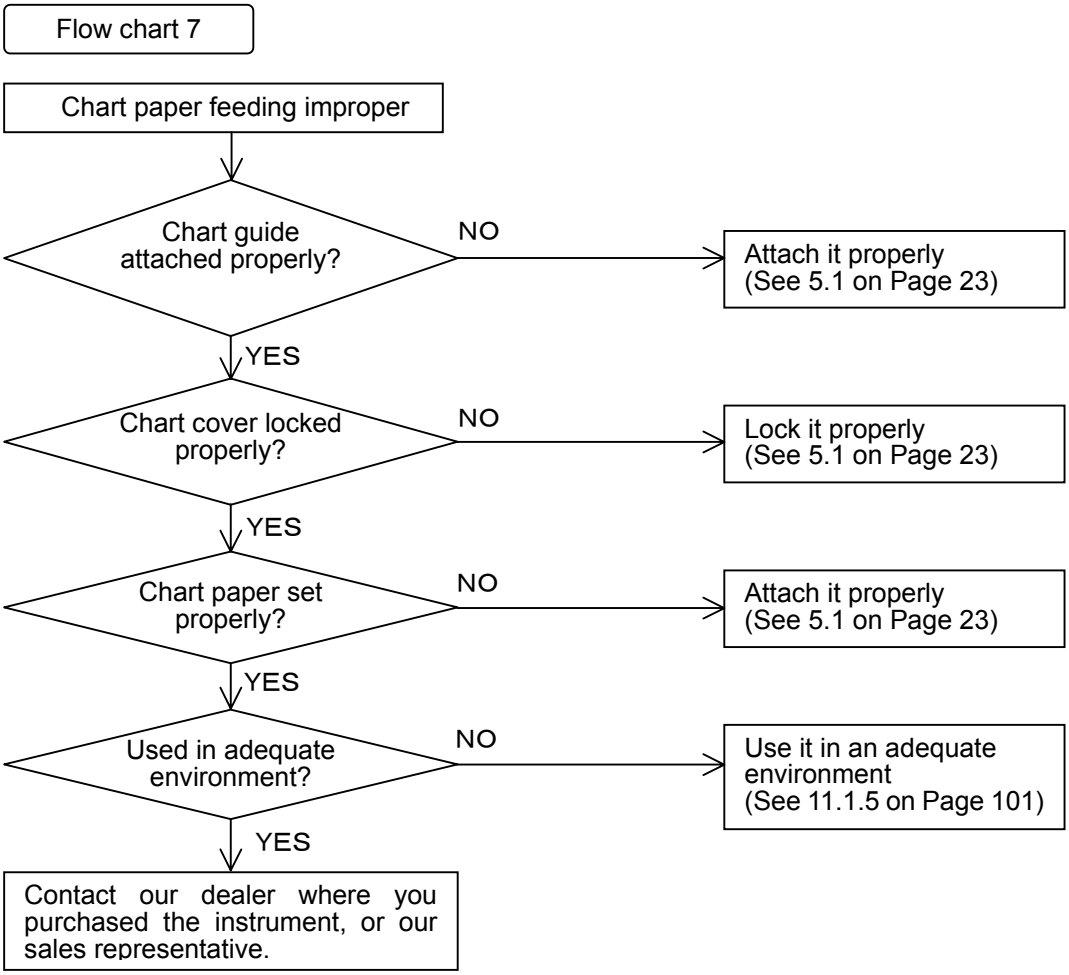

10.2 Self Diagnosis Function (ERROR)

This instrument always diagnoses itself on the items listed in the Table 10.1 below. When an error is found in the self diagnosis results, a relevant error number is displayed.

10.2.1 Self diagnosis Items

Table 10.1 Status output list

Type	Error message	Part	Diagnosis	Remedy
Hard ware error	E Err01	Zero point sensor	Zero point position of servomotor cannot be detected.	Contact our dealer where you purchased the instrument or our sales representative.
	E Err02	ADC	AD conversion end error, Initializing error	
	E Err03	IC for clock	The clock battery is used up[Note1]	
	E Err04	WDT	Watchdog timer error	
	E Err05	EEP WRITE	Non-volatile memory Writing error	
	E Err06	EEP READ1	Non-volatile memory Reading error (Setup data)	
	E Err07	EEP READ2	Non-volatile memory Reading error (Engineering data)	
	E Err08	EEP READ3	Non-volatile memory Reading error (ADC Calibration data)	
Operation error	E Err21	Area error	Input value is beyond the setting range.	Set properly
	E Err22	Time error	Clock time setting error	
	E Err23	Setting range error	Setting the channel (CH1) which cannot set the sum/difference/average operation.	
	E Err24	Area error	Span L ≧ Span R	
	E Err25	Area error	Scale L ≧ Scale R	
	E Err26	Area error	Zone L ≧ Zone R or Zone R－Zone L is less than 5mm.	
	E Err27	Reference channel setting error	The reference channel range of the sum/difference/average operation is except Volt, TC, RTD and SCALE.	
	E Err28	All channels skip error	Setting the all channels to Skip	
other	E Err41	Calibration value input error	Not calibrating with the specified input.	Calibrate it with correct input.

[Note1]The battery life is supposed to last approx.10 years but sometimes depends on the environment it is used.

10.2.2 Error Display

- When multiple errors occurr, their serial error numbers are displayed automatically.
- When an error is recovered, an error display can be canceled by inputting the “REC” key.

CAUTION

While an error is indicated, Auto, Manual and Data/Time are not indicated.

11. SPECIFICATIONS

11.1 Common Specifications

11.1.1 Input Signal

DC voltage : ±10, 0 to 20, 0 to 50, ±200 mV DC, ±1, 0 to 5, ±10 V DC

Thermocouple : B, R, S, K, E, J, T, C, Au-Fe, N, PR40-20, PLⅡ, U, L

Resistance temperature detector : Pt100, JPt100

DC current : 4 to 20mAdc (External shunt resistor: 250 Ω<sold separately: HMSU3081A11>)

11.1.2 Performance and Characteristics

Digital accuracy rating : See 11.2.1

Input impedance : 10M Ω min. in mV, TC input (without burnout)
200k Ω min. in mV, TC input (with burnout)
1M Ω min. in voltage input
250 Ω(shunt resistance : external <sold separately: HMSU3081A11>)
in mA input

Allowable signal source resistance
: 10k Ω max. in mV, TC input (without burnout)
100 Ω max. in mV, TC input (with burnout)
1k Ω max. in Voltage input
10 Ω max.(per line) in Resistance temperature detector input

Normal mode reduction ratio : 60dB min.(50/60±0.1Hz)

Common mode reduction ratio : 140dB min.(50/60±0.1Hz)

Isolation resistance : 0.5kVdc 20M Ω min. between each terminal and grounding terminal

Withstand Voltage : 1.5kVac for 1 minute between the power terminal and grounding terminal
: 0.5kVac for 1 minute between the input terminal and grounding terminal
: 0.2kVac for 1 minute between the input terminals
Interchannel maximum noise voltage: 200 Vac at 50/60 Hz

Vibration resistance : 10 to 60Hz 1m/s^2 max.

Shock resistance : 2m/s^2 max.

Clock precision : ±50ppm max.

Chart feed accuracy : ±0.1% max.

11.1.3 Structure

Mounting : Panel mounting(vertical panel)
Allowable backward inclination : Within 30˚

Material(Color) : Case ; Polycarbonate(Black), Glass 10% UL94-V2
Door ; Polycarbonate UL94-V2(Clear)
; Dust-proof, drip-proof (Based on IEC529-IP65) not evaluated as part of Underwriters Laboratories Listing certification.

11.1.4 Power Source

Rated supply voltage range : 100 to 240Vac
Working supply voltage range : 85 to 264Vac
Rated power frequency : 50/60Hz
Working frequency range : 45 to 65Hz

Table 11.1 Power consumption

	100VAC	Max. power consumption
6-dot recorder	About 25VA	About 30VA

11.1.5 Normal Operating Conditions

Ambient temperature : 0 to 50℃
Ambient humidity : 20 to 80%RH
Supply voltage : 85 to 264Vac
Supply frequency : 45 to 65Hz
Vibration : 10 to 60Hz 0.2m/s^2 max.
Shock : Unacceptable
Magnetic field : 400A/m max. (DC and AC: 50/60Hz)
Noise : Normal mode(50/60Hz)
DC current, Thermocouple; Peak value lower than the span width of the measurement range
Resistance temperature detector ; 50mV max.
Common mode (50/60Hz) ; 250Vac max.
Interchannel maximum noise voltage: 200 Vac at 50/60 Hz
Posture : Allowable backward inclination : within 30˚, Right-and-left level
Warming up time : 30 minutes min. from the time of a power-on

11.1.6 Alarm Output (Option : LH6)

Number of output	: 6 points（Built-in option, normally open）
Alarm type	: 2 types(H, L), total 4 levels/channel
Contact point capacity	: 250Vac, 3A max. (Resistive load) 30Vdc, 3A max. (Resistive load) 125Vdc, 0.5A max. (Resistive load)
Hysteresis	: 0.5%
Setting accuracy	: Digital display accuracy

11.1.7 Safety Standard and EMI Standard

Electrical safety	: IEC1010-1,UL3101-1 Installation category Ⅱ and pollution degree 2.
Emissions	: EN55011 Group1 Class A
Immunity	: EN50082-2

11.1.8 DI Function (Option : RE6)

A maximum of 3 points can be set.

11.1.9 Running out of paper Detecting Function (Option : FL)

Detects the Running out of paper and outputs it to an alarm.

11.2 Standard Specifications

11.2.1 Measurement Range

The arbitrary setup is possible by the front key operation.

A digital accuracy rating is as Table11.1 at Reference operating conditions. It is shown below.

Reference operating conditions	: Ambient temperature	; 23 ±2℃
	Ambient humidity	; 55 ±10%RH
	Power source voltage	; 85 to 264Vac
	Electric wave frequency	; 50/60%Hz ±1%
	Warming up time	; 30 minutes min.

The performance in the state where there is no vibration and shock.

Terminal block reference junction compensation accuracy is not included in the digital indicating accuracy rating.

Terminal block reference junction compensation accuracy

◇B, R, S, Au-Fe, PR40-20 : ±1℃

◇K, E, J, T, C, N, PLⅡ, U, L : ±0.5℃

Table 11.2 Measurement Range

Type	RANGE	Measurement range	Measurement		
			Indication (Digital)		Recording (Analog)
			Accuracy	Max. resolution	Accuracy
DC voltage DC current Input		-10 to 10mV	±(0.2% of rdg + 3digits)	10 μV	Digital display accuracy ±(0.3% of span)
		0 to 20mV	±(0.2% of rdg + 3digits)	10 μV	
		0 to 50mV	±(0.2% of rdg + 2digits)	10 μV	
		-200 to 200mV	±(0.2% of rdg + 3digits)	100 μV	
		-1 to 1V	±(0.1% of rdg + 3digits)	1mV	
		0 to 5V	±(0.2% of rdg + 2digits)	1mV	
		-10 to 10V	±(0.3% of rdg + 3digits)	10mV	
		4 to 20mA	±(0.2% of rdg + 2digits)	0.01mA	
Thermocouple	B	0.0 to 1820.0℃	±(0.15% of rdg + 1℃) 400 to 600℃, ±2℃ An accuracy is not guaranteed within a range of 0 to less than 400℃	0.1℃/0.18°F	
		32.0 to 3308.0°F	±(0.15% of rdg + 1.8°F) 752 to 1112°F, ±3.6°F An accuracy is not guaranteed within a range of 32 to less than 752°F		
	R1	0.0 to 1760.0℃	±(0.15% of rdg + 1℃) ※0 to 100℃, ±3.7℃ 100 to 300℃, ±1.5℃		
		32.0 to 3200.0°F	±(0.15% of rdg + 1.8°F) ※32 to 212°F, ±6.7°F 212 to 572°F, ±2.7°F		

Type	RANGE	Measurement range	Measurement		
			Indication (Digital)		Recording (Analog)
			Accuracy	Max. resolution	Accuracy
Thermocouple	R2	0.0 to 1200.0℃	±(0.15% of rdg + 0.8℃) ※0 to 100℃, ±3.7℃ 100 to 300℃, ±1.5℃	0.1℃/0.18˚F	Digital display accuracy ±(0.3% of span)
		32.0 to 2192.0˚F	±(0.15% of rdg + 1.44˚F) ※32 to 212˚F, ±6.7˚F 212 to 572˚F, ±2.7˚F		
	S	0.0 to 1760.0℃	±(0.15% of rdg + 1℃) ※0 to 100℃, ±3.7℃ 100 to 300℃, ±1.5℃		
		32.0 to 3200.0˚F	±(0.15% of rdg + 1.8˚F) ※32 to 212˚F, ±6.7˚F 212 to 572˚F, ±2.7˚F		
	K1	-200.0 to 1370.0℃	±(0.15% of rdg + 0.7℃) ※-200 to -100℃, ±(0.15% of rdg + 1℃)		
		-328.0 to 2498.0˚F	±(0.15% of rdg + 1.3˚F) ※-328 to -148˚F, ±(0.15% of rdg + 1.8˚F)		
	K2	-200.0 to 600.0℃	±(0.15% of rdg + 0.4℃) ※-200 to -100℃, ±(0.15% of rdg + 1℃)		
		-328.0 to 1112.0˚F	±(0.15% of rdg + 0.7˚F) ※-328 to -148˚F, ±(0.15% of rdg + 1.8˚F)		
	K3	-200.0 to 300.0℃	±(0.15% of rdg + 0.3℃) ※-200 to -100℃, ±(0.15% of rdg + 1℃)		
		-328.0 to 572.0˚F	±(0.15% of rdg + 0.5˚F) ※-328 to -148˚F, ±(0.15% of rdg + 1.8˚F)		
	E1	-200.0 to 800.0℃	±(0.15% of rdg + 0.5℃)		
		-328.0 to 1472.0˚F	±(0.15% of rdg + 0.9˚F)		
	E2	-200.0 to 300.0℃	±(0.15% of rdg + 0.4℃)		
		-328.0 to 572.0˚F	±(0.15% of rdg + 0.7˚F)		
	E3	-200.0 to 150.0℃	±(0.15% of rdg + 0.3℃)		
		-328.0 to 302.0˚F	±(0.15% of rdg +0.5˚F)		
	J1	-200.0 to 1100.0℃	±(0.15% of rdg + 0.5℃) ※-200 to -100℃, ±(0.15% of rdg + 0.7℃)		
		-328.0 to 2012.0˚F	±(0.15% of rdg + 0.9˚F) ※-328 to -148˚F, ±(0.15% of rdg + 1.3˚F)		
	J2	-200.0 to 400.0℃	±(0.15% of rdg + 0.4℃) ※-200 to -100℃, ±(0.15% of rdg + 0.7℃)		
		-328.0 to 752.0˚F	±(0.15% of rdg + 0.7˚F) ※-328 to -148˚F, ±(0.15% of rdg + 1.3˚F)		
	J3	-200.0 to 200.0℃	±(0.15% of rdg + 0.3℃) ※-200 to -100℃, ±(0.15% of rdg + 0.7℃)		
		-328.0 to 392.0˚F	±(0.15% of rdg + 0.5˚F) ※-328 to -148˚F, ±(0.15% of rdg + 1.3˚F)		

Type	RANGE	Measurement range	Measurement		
			Indication (Digital)		Recording (Analog)
			Accuracy	Max. resolution	Accuracy
Thermocouple	T1	-200.0 to 400.0℃	±(0.15% of rdg + 0.5℃) ※-200 to -100℃, ±(0.15% of rdg + 0.7℃)	0.1℃/0.18˚F	Digital display accuracy ±(0.3% of span)
		-328.0 to 752.0˚F	±(0.15% of rdg + 0.9˚F) ※-328 to -148˚F, ±(0.15% of rdg + 1.3˚F)		
	T2	-200.0 to 200.0℃	±(0.15% of rdg + 0.4℃) ※-200 to -100℃, ±(0.15% of rdg + 0.7℃)		
		-328.0 to 392.0˚F	±(0.15% of rdg + 0.7˚F) ※-328 to -148˚F, ±(0.15% of rdg + 1.3˚F)		
	C	0.0 to 2320.0℃	±(0.15% of rdg + 1℃)		
		32.0 to 4208.0˚F	±(0.15% of rdg + 1.8˚F)		
	Au-Fe	1.0 to 300.0K	±(0.15% of rdg + 1K) ※1 to 20 K, ±2.4 K	0.1K	
	N	0.0 to 1300.0℃	±(0.15% of rdg + 0.7℃)	0.1℃/0.18˚F	
		32.0 to 2372.0˚F	±(0.15% of rdg + 1.3˚F)		
	PR40-20	0.0 to 1880.0℃	±(0.15% of rdg + 1℃) ※0 to 300℃, ±37.6℃ 300 to 800℃, ±18.8℃		
		32.0 to 3416.0˚F	±(0.15% of rdg + 1.8˚F) ※32 to 572˚F, ±67.7˚F 572 to 1472˚F, ±33.8˚F		
	PL Ⅱ	0.0 to 1390.0℃	±(0.15% of rdg + 0.7℃)		
		32.0 to 2534.0˚F	±(0.15% of rdg + 1.3˚F)		
	U	-200.0 to 400.0℃	±(0.15% of rdg + 0.5℃) ※-200 to -100℃, ±(0.15% of rdg + 0.7℃)		
		-328.0 to 752.0˚F	±(0.15% of rdg + 0.9˚F) ※-328 to -148˚F, ±(0.15% of rdg + 1.3˚F)		
	L	-200.0 to 900.0℃	±(0.15% of rdg + 0.5℃) ※-200 to -100℃, ±(0.15% of rdg + 0.7℃)		
		-328.0 to 1652.0˚F	±(0.15% of rdg + 0.9˚F) ※-328 to -148˚F, ±(0.15% of rdg + 1.3˚F)		
Resistance temperature detector	Pt100-1	-200.0 to 650.0℃	±(0.15% of rdg + 0.3℃)		
		-328.0 to 1202.0˚F	±(0.15% of rdg + 0.6˚F)		
	Pt100-2	-200.0 to 200.0℃	±(0.15% of rdg + 0.2℃)		
		-328.0 to 392.0˚F	±(0.15% of rdg + 0.4˚F)		
	JPt100-1	-200.0 to 630.0℃	±(0.15% of rdg + 0.3℃)		
		-328.0 to 1166.0˚F	±(0.15% of rdg + 0.6˚F)		
	JPt100-2	-200.0 to 200.0℃	±(0.15% of rdg + 0.2℃)		
		-328.0 to 392.0˚F	±(0.15% of rdg + 0.4˚F)		

B,R,S,K,E,J,T,N :JIS C 1602-1995(IEC584-1)
C :Made by “Hoskins” (WRe5-26)
Au-Fe :ASTM COMMITTEE-20 ON TEMPERATURE MEASUREMENT
PR40-20 :ASTM E1751-1995
PL Ⅱ :ASTM E1751-1995
U :DIN43710 :1985(Cu-CuNi)
L :DIN43710 :1985(Fe-CuNi)
Pt100 :JIS C 1604-1997(IEC751)
JPt100 :(JIS C 1604-1981)

11.2.2 The Accuracy at the Computation

(1) Scaling

The accuracy rating at the scaling is shown as following formula.
Scaling accuracy (digits) = ±(Range accuracy rating (digits) × Scaling factor +2 digits)

But, Scaling factor = $\dfrac{\text{Scaling span (digits)}}{\text{Measurement range span (digits)}}$

Example 1) When VOLT range is −1.000 to 1.000V and Scaling range is 0.00 to 100.00.

Range accuracy rating = 0.1% × 1.000V + 3 digits

(Input +1.000V) = 4 digits

Scaling factor $= \dfrac{10000-0}{1000-(-1000)} = 5$

Therefore, Scaling accuracy = ±(4 × 5 + 2)

= ±22 digits

Analog recording accuracy $= \pm\left[4+\{1000-(-1000)\}\times\dfrac{0.3}{100}\right]$

= ±10 digits

= ±0.01V

Example 2) When Type K is 0.0 to 200.0℃ and Scaling is 0.00 to 200.00.

Range accuracy rating = 0.15% × 200.0 + 0.3℃

(Input 200℃) = 0.6℃

= 6 digits

Scaling factor $= \dfrac{20000-0}{2000-0} = 10$

Therefore, Scaling accuracy = ±(6 × 10 + 2)

= ±62 digits

= ±0.62℃

(2) Square root computation

The square root computation is shown as following formula.

Display value $= 10\sqrt{\text{Process variable}}$

Display value accuracy rating: ε, Process variable accuracy: e, and
Process variable: x (convert into %).

Display value $= 10\sqrt{x \pm e} \fallingdotseq 10\sqrt{x} \pm \dfrac{10e}{2\sqrt{x}}$

Therefore, Display value accuracy $\varepsilon = \dfrac{5e}{\sqrt{x}}$

When input 4 to 20mA, the square root computation accuracy: $\varepsilon$is as following formula.

Measuring 100% $\varepsilon_{100} = \frac{5e}{\sqrt{100}} = \frac{5(0.2+0.125)}{10} = 0.16\%$ rdg

Measuring 50% $\varepsilon_{50} = \frac{5e}{\sqrt{50}} = \frac{5(0.1+0.167)}{7.07} = 0.19\%$ rdg

Measuring 9% $\varepsilon_{9} = \frac{5e}{\sqrt{9}} = \frac{5(0.018+1.39)}{3} = 2.3\%$ rdg

Measuring 1% $\varepsilon_{1} = \frac{5e}{\sqrt{1}} = 5(0.002+12.5) = 62.5\%$ rdg

If the process variable is low as above, its accuracy rating is incorrect.

(3) Decade

The accuracy rating at the decade computation is defined the logarithm of display value. Normally, the accuracy rating is less than 1 digit and you cannot read by significant digit.

(4) Difference, Sum, and Average

The accuracy rating of Difference, Sum, and Average is shown as following formula.

Difference and Sum : Reference channel accuracy rating ×2

Average : Reference channel accuracy rating

Example) When Reference channel VOLT is 00.00 to 10.00V and Difference is −10.00 to 10.00.

Reference channel accuracy rating = ±(0.3%×10.00V+3 digits)

= ±(1000×0.003+3)

= ±6 digits

Difference accuracy rating = ±6×2 = ±12 digits

11.2.3 Individual Specifications

Table 11.3 Specification Items

Block	Item	Specification
Input Unit	Measuring Point	6
	Input Sampling	10s/6CH
	Display Interval	2.5s
Record & Printer	Recording Form	Wire dot (6-color ink ribbon)
	Printing Form	
	Recording Width	100mm
	Print Period	10s/6CH [Note 1]
	Chart paper	Length : 16m, Width : 114mm, Folding width : 40mm The length of the Clean Chart is 12 m.
	Chart feed speed	0, 1, 2, 3, 4, 5, 10, 15, 20, 25, 30, 40, 50, 60, 75, 80, 90, 100,120, 150, 160, 180, 200, 240, 300, 360, 375, 450, 600, 720, 750, 900, 1200, 1500mm/h (Analog recording is not done during the chart feed speed is set to 0mm/h.)
	Recording color	No.1(Purple), No.2(Red), No.3(Green), No.4(Blue), No.5(Brown), No.6(Black) [Note 2]
	Printing color	Purple, Red, Green, Blue, Brown, Black
Weight		1.5kg max.
Power consumption		25VA max. (at 100Vac)

[Note 1] Select the Dot Point Interval from 10, 20, 30 and 60 seconds depending on the setting.

[Note 2] Possible to the arbitrary color.

11.2.4 Standard Functions

Table 11.4 Standard Functions

Item	Description
Analog indication	None
Analog recording	Analog recording with 6-color dot.
Engineering unit indication	None
Digital display	Indicates Channel No., Process variable, Chart feed speed, Alarm setting value on the display.
Logging print	Prints Date, Time, Scaling, Chart feed speed, Process variable and Engineering unit at a programmed interval. With the setting, it is possible to choose. Synchronous Asynchronous print.
List print	Prints Chart feed speed, Sensor type, Measurement range, Engineering unit, Alarm setting value, Comment, Printing description, Logging print ON/OFF, Zone, Partial Compression/Expansion
Engineering list print	Prints Channel or Tag, Alarm function, Logging print ON/OFF, Reference time, Interval, Scaling print ON/OFF, Logging print Sync./Async., Alarm hysteresis, Burn out, DI function(Option)
Affix print	Prints Channel number near the analog record.
Manual print	Prints Measurement result by key input. Analog recording pauses.
Dot print skip	Skips recording an unused channel.
Programming	Programs Chart feed speed, Alarm setting value, Logging, Dot point skip, Date and Time by key operation.
Memory back up	A built-in lithium battery protects the clock function. The battery life is 10 years. (total power off period of the instrument : 5 years) A non-volatile memory stores setting data and calibration data.
Alarm	Sets 2 types (H, L) of alarms per channel. Sets a total of 4 levels.
Chart feed speed	Selects Chart feed speed from 34 types.
Clock indication	Indicates Year, Month, Day, Hour and Minute. Sets the year in A.D, and adjusts leap year automatically.
Self diagnosis	When malfunctions occur “E Err＊＊” is indicated. (＊＊: type of the defect)
Scaling	Indicates and record the input of a unification signal 4 to 20mA etc. is converted into the engineering scales.

11.3 Standard Setting Functions

11.3.1 Standard Setting Functions

Table 11.5 Standard Setting Functions

Function	Description
Burnout	To deflect over toward 100% with disconnecting input. Possible to specify the every channel's burnout. (DC voltage of ±50mV max., TC input)
Tag Number setting	Sets a tag number up to 7 characters every channel. (Prints at a logging print)
Reference Junction Compensation	Specifies an inside/outside of the Reference Junction Compensation.
Copy Function	Copies a channel setting.
Setting input offset setting	Setting input offset is possible for each channel.
Zone Recording (Track Recording)	Specifies a recording area per channel to separate the record into Tracks.
Partial compression/expansion	Records Partial Compression/Expansion to 1-crease line every channel.
Decade Recording Indication	Records and indicates by 5 decades. It is 2 digits that the effective number to indicate and print.
Alarm Print	Prints Occurrence time, Occurrence channel, Setting No. and Alarm type in purple when alarm activates.
Alarm Recovery Print	Prints Recovery time, Recovery channel, Setting No. and Alarm type in purple when alarm recovers.
Computation	Computes Square root.
Interchannel Computation	Computes Sum, Difference and Average between channels.
Alarm Hysteresis Width	Sets an alarm hysteresis width 0% FS or 0.5% FS.

11.4 Optional Functions

11.4.1 Remote Function by DI function

Function	Description
Chart Feed Start/Stop	Starts with turning to ON. Stops with turning to OFF.
Changing Chart feed Speed	Changes 1st with turning to ON and 2nd with OFF.
Comment Print (Sync./Async.)	Prints Comment with turning to ON.
Manual Print (Sync./Async.)	Prints Manual Print with turning to ON.
Date and Time Print (Sync./Async.)	Prints Date and Time with turning to ON.

11.4.2 Alarm Output function

6 relays

11.4.3 Communication unit

RS-232C(Standard)

RS-485(Option)

Shinko North America Ltd.

Office : 25 Whitefriars Drive Toronto, Ontario, Canada M3A 2L2
Mail Address : 25 Whitefriars Drive Toronto, Ontario, Canada M3A 2L2
URL : http://www.shinkona.com
Toll Free: : 1 866-4SHINKO
Tel : 416 444-0817
Fax: 416 444-2361

№.ＨＲ７１Ｅ３ 2001.10